Det här verket har digitaliserats vid Göteborgs universitetsbibliotek. Alla tryckta texter är OCR-tolkade till maskinläsbar text. Det betyder att du kan söka och kopiera texten från dokumentet. Vissa äldre dokument med dåligt tryck kan vara svåra att OCR-tolka korrekt vilket medför att den OCR-tolkade texten kan innehålla fel och därför bör man visuellt jämföra med verkets bilder för att avgöra vad som är riktigt.

This work has been digitized at Gothenburg University Library. All printed texts have been OCR-processed and converted to machine readable text. This means that you can search and copy text from the document. Some early printed books are hard to OCR-process correctly and the text may contain errors, so one should always visually compare it with the images to determine what is correct.

GÖTEBORGS UNIVERSITET
GÖTEBORGS UNIVERSITETSBIBLIOTEK

T

DOKTORSAVHANDLINGAR VID CHALMERS TEKNISKA HÖGSKOLA
NR 12

ISOTOPE ENRICHMENT BY COUNTERCURRENT ELECTROMIGRATION IN MOLTEN SALTS

BY

ARNOLD LUNDÉN

GÖTEBORG 1956

DOKTORSAVHANDLINGAR VID CHALMERS TEKNISKA HÖGSKOLA
NR 12

ISOTOPE ENRICHMENT BY COUNTERCURRENT ELECTROMIGRATION IN MOLTEN SALTS

AV

ARNOLD LUNDÉN

AKADEMISK AVHANDLING

SOM MED TILLSTÅND AV CHALMERS TEKNISKA HÖGSKOLA
FÖR TEKNOLOGIE DOKTORSGRADS VINNANDE
TILL OFFENTLIG GRANSKNING FRAMLÄGGES
Å FÖRELÄSNINGSSALEN FÖR FYSIK,
GIBRALTARGATAN 5 B, GÖTEBORG,
LÖRDAGEN DEN 16 JUNI 1956 KL. 10

AVHANDLINGEN FÖRSVARAS PÅ
TYSKA OCH SVENSKA

LUND 1956
HÅKAN OHLSSONS BOKTRYCKERI

Avhandlingen omfattar följande arbeten:

1. A. Klemm, E. Lindholm u. A. Lundén: Der Isotopieeffekt der elektrolytischen Wanderung von Zink-Ionen in geschmolzenem Zinkbromid. Z. Naturforschg. *7a*, 560—564 (1952).

2. A. Lundén u. E. Berne: Der Isotopieeffekt bei der elektrolytischen Wanderung der Kupfer-Ionen in geschmolzenem Kupferchlorür. Z. Naturforschg. *9a*, 684—689 (1954).

3. A. Lundén, C. Reuterswärd u. N. Sjöberg: Der Isotopieeffekt bei der elektrolytischen Wanderung der Kalium-Ionen in geschmolzenem Kaliumnitrat. Z. Naturforschg. *10a*, 279—281 (1955).

4. A. Klemm u. A. Lundén: Isotopenanreicherung beim Chlor durch elektrolytische Überführung in geschmolzenem Bleichlorid. Z. Naturforschg. *10a*, 282—284 (1955).

5. A. Lundén, E. U. Monse u. N. G. Sjöberg: Der Isotopieeffekt bei der elektrolytischen Wanderung von Li-Ionen in geschmolzenem Lithiumnitrat. Z. Naturforschg. *11a*, 75—79 (1956).

6. A. E. Cameron, W. Herr, W. Herzog u. A. Lundén: Isotopen-Anreicherung beim Brom durch elektrolytische Überführung in geschmolzenem Bleibromid. Z. Naturforschg. *11a*, 203—205 (1956).

7. A. Lundén: Isotope Enrichment by Countercurrent Electromigration in Molten Salts. Akad. avhandl. Lund 1956.

DOKTORSAVHANDLINGAR VID CHALMERS TEKNISKA HÖGSKOLA
NR 12

ISOTOPE ENRICHMENT BY COUNTERCURRENT ELECTROMIGRATION IN MOLTEN SALTS

BY

ARNOLD LUNDÉN

GÖTEBORG 1956

LUND 1956
HÅKAN OHLSSONS BOKTRYCKERI

To my parents

Contents

I Introduction 7

II Experiments 9

III Theory of the isotope enrichment process 25

IV The salts 31

Some attempts to reduce the operating temperature 32

V Electrical circuits 38

VI The electrodes 41

VII Construction of separation columns 53

VIII Permeability of separation columns 56

IX Electro-osmosis in separation columns 60

X Temperature distribution in the columns 63

XI On the efficiency of the separation columns 65

XII Disturbances caused by gas bubbles and local overheating in the columns 71

XIII The mass analysis 74

XIV The accuracy of the determined mass effects 76

XV Empirical and theoretical systematic relations between the determined mass effects 80

XVI Halides and nitrates — a comparison of physical properties . . . 86

XVII Review of isotope enrichment applied to certain elements 91

Lithium p. 92, magnesium p. 94, chlorine p. 95, potassium p. 97, calcium p. 98, copper p. 98, zinc p. 98, gallium p. 99, bromine p. 99, rubidium p. 99, strontium p. 100, silver p. 100, cadmium p. 100, indium p. 101, tin p. 101, rare earths p. 101, thallium p. 102, lead p. 102, conclusions p. 102.

Summary 103

Acknowledgements 104

References 106

CHAPTER I

Introduction

Ever since Thomson [T 1, A. 1] discovered in 1912 that an element could have more than one stable isotope, a great many methods have been tried, with more or less success, either to completely separate the isotopes of an element from each other or at least to achieve a certain enrichment of one isotope relative to the others. The different separation methods have been reviewed many times, both in textbooks on nuclear physics and in other publications, e.g. [W 1, A 1, Z 1]. A survey of methods will thus be omitted here, the subject being restricted to isotope enrichment by countercurrent electromigration, specially in molten salts, except in chapter XVII, where we shall review the attempts made to enrich the isotopes of some elements.

In a discussion on isotopes at the Royal Society Lindemann [L 1] suggested in 1921 that isotopes could be enriched by the electrolysis of a solution if the velocity of an ion depended on its mass. At that time Kendall and his co-workers Crittenden and White [K 1, K 2, K 3] had already started their attempts to enrich the chlorine isotopes by ionic migration in solutions in agar-agar gels. However, they could not detect any change in the natural isotopic abundance, although their method proved successful for the separation of ions with nearly the same velocity, such as I^-—SCN^-, Ba^{++}—Ca^{++}, Ba^{++}—Sr^{++}, I^-—Cl^- [K 3], rare earths Y—Er, Nd—Pr, Gd—Sm [K 4, K 5] and Ba—MsThI [K 6] An attempt to separate hafnium and zirconium was not successful [K 7].[1]

An attempt by Pilley [P 1] to separate the isotopes of chlorine and magnesium was also without positive results.[2]

---

[1] These experiments have been reviewed several times by Kendall [K 8, K 9, K 10].

[2] An experiment by Eilert [E 1] might be classified as electromigration although the technique was different from other work covered by the term electromigration. A solution of $NiSO_4$ was electrolyzed with a clay cylinder as

The fact that all these early attempts to separate isotopes by their difference in mobilities were unsuccessful led to the conclusion, as expressed e.g. by JETTE [J 1], that from a theoretical point of view it was impossible to separate isotopes by this method, and the interest was shifted over to other more promising separation methods.

However, the great interest for separated isotopes during the last World War led to new experiments with electromigration, this time with success. In light of these results the question arises why all the early attempts failed. One reason is that the mass analyses e.g. by atomic weight determinations [K 3, P 1] were too crude to detect the small abundance shifts that might have occurred in the samples. Another reason is that hydration of ions in aqueous solutions gives smaller relative mass differences for the ions than for the isotopes themselves.

The first successful enrichments in aqueous solutions were reported by a team working at the N.B.S. in Washington under BREWER, MADORSKY, STRAUS and WESTHAVER. They enriched isotopes of potassium [B 1, B 2], chlorine [M 1] and copper [M 2]. The theoretical aspects were treated by WESTHAVER [W 2] and BREIT and FRIEDMAN [B 3].

Meanwhile KLEMM in Germany attacked the problem from another side. He concluded from the old unsuccessful experiments, that solvation must be avoided if optimal enrichment effects are desired. He chose to work with a solid, α-AgI in which modification the conductivity is about as good as for the molten salt, and where the current is transported solely by the silver ions [K 11, K 12]. The heavy isotope ^{109}Ag was enriched at the anode; its abundance increased from 48 to 51 per cent. After this successful experiment with a solid, KLEMM turned his interest to molten salts, specially halides. One reason for the choice was that the conductivities of these melts had been investigated systematically [B 4]; another reason, of course, was their typical ionic structure. In 1947 KLEMM, HINTENBERGER and HOERNES [K 13] reported that they had enriched the heavy isotopes of lithium and potassium in molten LiCl containing some KCl as an impurity. Up to the present date some fifteen enrichment experiments by KLEMM's method have been reported, cf p. 16 and table 1.

---

a diaphragm between the electrodes. The process was interrupted as soon as some of the Ni had penetrated into the cylinder, which was then removed and washed free from salt. This process was repeated about 100 times after which the atomic weight of the Ni in the anode compartment was found to have increased by 0.5 per cent, claimed to be about twice the maximal error of the determination.

CHAPTER II

Experiments

We shall describe a couple of experiments to give the background to the discussions in the following chapters.

Let us first consider an arrangement for enriching the light isotope of chlorine, ^{35}Cl. If molten $ZnCl_2$ is electrolyzed, metallic zinc is deposited at the cathode, while chlorine is normally liberated as a gas at the anode. If, however, the anode consists of molten zinc metal, the chlorine reacts quantitatively "in statu nascendi" with the metal and new $ZnCl_2$ is produced. Thus we have a system — $Zn/ZnCl_2/Zn+$ where the amount of $ZnCl_2$ is conserved and zinc metal is merely transported from the anode to the cathode. Hence the chlorine is in a closed system, and the chlorine ions move toward the anode with the same velocity as the salt "streams" in the opposite direction. The net velocity is thus zero, and we can expect an enrichment of the light isotope in the direction of the anode if its velocity is slightly greater than the mean velocity of the two isotopes (mean velocity=net velocity). At the same time we can expect the heavy isotope to be enriched at the cathode. A change in the isotopic ratio can, however, only be achieved if we suppress convection currents in the melt, for which purpose we introduce a diaphragm, our separation column.

Fig. 1 shows the cell used for $ZnCl_2$. It is made of Pyrex glass except the separation column made of Supremax glass. The column is filled with glass powder kept in place by two fritted glass discs (Chapter VII). This column separates the anode and cathode compartments. The apparatus is fitted into a vertical oven. The filler A (Fig. 1) with some sticks of pure Zn (23.12 g) is lowered down into the anode compartment, and about 70 g of $ZnCl_2$, p.a. (Mercks) is filled into the side tube B around which an auxiliary oven is mounted. The whole apparatus is under vacuum while the main oven is heated up to the temperature where the zinc in the holder melts (melting point 419.4°C). The low part of the holder is then just filled, without

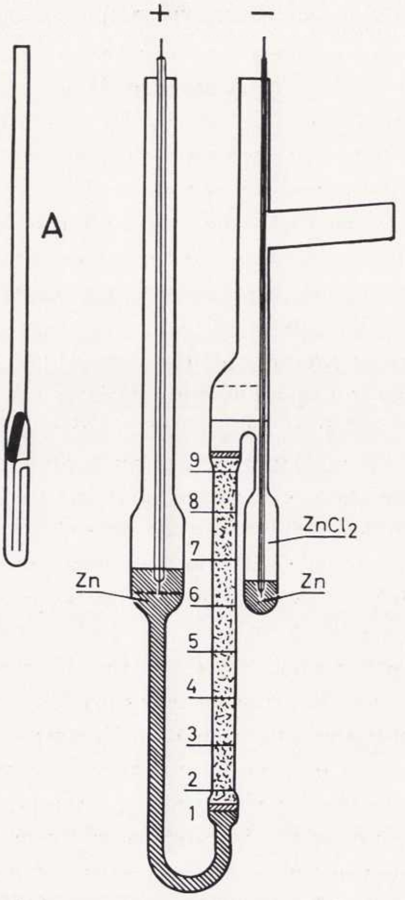

Fig. 1. Schematical drawing (not to scale) of cell used for the enrichment of ^{35}Cl in molten $ZnCl_2$. The dotted lines mark the surface of the Zn in the anode compartment and the $ZnCl_2$ in the cathode compartment at the end of the run. The division of the separation column into 9 samples is indicated.

A: The holder used for melting zinc.
B: The side tube in which the salt is melted.

any excess of metal flowing out from the holder. The next step is to heat the auxiliary oven until the $ZnCl_2$ melts (melting point 262°C) and flows down into the main apparatus, still kept under vacuum. The salt thus fills the whole cathode compartment and penetrates down through the separation column. The moment the salt has reached the lower glass disc, argon gas is allowed to exercise a gentle pressure on the zinc surface in the holder. The metal is thus forced out through the small tube and the lowest part of the anode compartment is filled with oxide-free zinc (the oxide skin stays in the holder) which is pressed up against the disc. Owing to the high surface tension of a metal[1] the zinc does not penetrate through this disc, if there is not a considerably higher pressure in the anode compartment. If some gas has been trapped between the zinc and the disc, the gas must be removed by pumping vacuum on the whole apparatus. The next step is to let in air (or an inert gas such as nitrogen) in the apparatus and fill the anode compartment with molten zinc to such a height that the metal is pressed against the disc even at the end of the run.

We insert into the cathode compartment a Pyrex tubing, shielding a tungsten wire leading down to the bottom of the sack, where the zinc metal is to be deposited. This sack is joined to the rest of the cell by a smaller tube, an arrangement that has proved to be effective for stopping metal dissolved in the salt to spread throughout the whole apparatus, cf. p. 44. The zinc anode also is connected by means of a tungsten wire in a pyrex tubing. When the current is turned on we notice during the first minute or two a rapid decrease in voltage, and increase in current through the melt. This phenomenon is typical for a $ZnCl_2$ run and is not as pronounced for systems with other melts. The reason is of course the strong temperature dependence of the conductivity of $ZnCl_2$. At the moment the current is switched on, the salt in the column is at about 500°C, the oven-temperature (kept stable by a regulator, cf. chapter V). The resistance in the melt is then high, but the heat generated in the column raises the temperature considerably, which means a strong drop in resistance. An equilibrium is soon reached, corresponding to a temperature about 100°C higher in the column than in the oven. (The column glowed faintly in the dark). This equilibrium in the column is very sensitive to changes in oven temperature. It could happen that the temperature regulator did not work as it should and the temperature in the oven rose by some 30°C. This was enough to cause such a slide in the equilibrium that the column was locally overheated, and nearly blocked for current transport because of gas inclusions built up in the packing. The good conditions were restored in the column merely by adjusting the temperature. There is normally a slight gradual decrease in cell-resistance during a run of this type (noticed in $Pb\mathbf{Cl}_2$, $Pb\mathbf{Br}_2$, $Tl\mathbf{Cl}$, $Zn\mathbf{Cl}_2$[1]) probably because small amounts of gas trapped in the column disappear gradually.

---

[1] The surface tension is of the order of 5 times higher for a molten metal than for a salt [F 2].

The regulation and measurement of the electrolysis current is treated in chapter V. All data for the actual run are given in table 1.

The $ZnCl_2$ salt used in the main run obviously contained some moisture as the melt was gray and not quite transparent because of its contents of ZnO (cf. chemical analysis below). After $8^1/_4$ days the current and heating were shut off and the cold cell was cut into pieces.

The zinc lump from the cathode sack weighed 51.5063 grams, 1 per cent less than equivalent to 42.60 Ah, the quantity of electricity determined by the copper coulometer. This minor discrepancy was expected because some zinc was lost as small grains remaining on the glass walls of the sack and perhaps also as metal dissolved in the salt. The column was divided into nine samples. After being weighed, each sample, consisting of a piece of glass tubing containing glass powder and salt, was boiled for about an hour in 100 ml H_2O to which 5 drops of HNO_3 had been added. The acid was necessary for dissolving the ZnO that was mixed with the salt. (See below). The remaining piece of glass tubing and glass powder was collected in a glass filtering crucible and weighed. The total amount of dissolved salt was now known. AgCl was precipitated in the solution in the usual way, which gave us the amount of $ZnCl_2$. As seen in table 10 we always got about 3 per cent less $ZnCl_2$ than expected from the total amount of dissolved salt. We think this discrepancy was due to the presence of ZnO in the salt, an assumption supported by it being more difficult to dissolve the samples than expected from earlier work with pure $ZnCl_2$, prepared by leading chlorine over the molten metal [K 16].

To check our assumption, we determined for some of the samples the amount of zinc in the filtrate from the AgCl-precipitation. The excess of $AgNO_3$ was removed by adding HCl. The solution was then diluted to 1000 ml and volumes were taken and titrated with 0.1 n NaOH either directly or after passing through a cation exchange resin in the hydrogen form, where the zinc is removed quantitatively, thus giving an excess of acid in this volume. As expected we found more zinc than equivalent to the chlorine. Assuming this excess to be ZnO we get a sum $ZnCl_2 + ZnO$ in excellent agreement with the total amount of "salt". We used the same method for determining the ZnO-excess to 2.2 per cent in the upper part of the cathode compartment. The slightly lower concentration of ZnO here than in the separation column can be explained by the continuous sedimentation of ZnO in the cathode compartment.[1]

---

[1] The element to be enriched is marked with bold types in the chemical symbol, when used as an abbreviation for the enrichment experiment, e.g. $\mathbf{Pb}Cl_2$ means that the lead isotopes were enriched in molten lead chloride, while $Pb\mathbf{Cl}_2$ means that the chlorine isotopes were enriched.

In a similar experiment on enriching the chlorine isotopes in $CdCl_2$ HERZOG [H 2] has found as much as 16 molar per cent Cd metal in the $CdCl_2$ from the column. This is due to the strong solubility of Cd in $CdCl_2$ (p. 44).

The described procedure for enriching ^{35}Cl in $ZnCl_2$ agrees in everything essential with previous work on $PbCl_2$, [K 18], $PbBr_2$ [C 1] and TlCl [H 1].

In principle the same method is used when enriching isotopes of metallic elements by electrolyzing one single salt and regenerating this salt at the cathode such as in runs with LiCl [K 19], $LiNO_3$ [L 2] and KNO_3 [L 3]. For most work with cations we have instead used systems containing several salts. As an example we shall now shortly describe an experiment for enriching the heavy lead isotopes in molten $PbCl_2$ [L 4].

We can expect a sharp boundary between $ZnCl_2$ and $PbCl_2$ in a separation column if we have the lightest salt, $ZnCl_2$, uppermost and the salt with the best conductivity, $PbCl_2$, nearest to the cathode. This can be seen by the following argument. The field strength is stronger in the less conducting $ZnCl_2$ than in $PbCl_2$. A "delayed" Pb^{2+} ion in the $ZnCl_2$ is then in a stronger field than the other lead ions. The "delayed" ion thus moves faster than the other ions and it will soon "catch up" the bulk of Pb^{2+} ions. The same argument shows that a Zn^{2+} ion in the $PbCl_2$ moves slower than the frontier. Thus we have a mechanism that tends to keep the boundary sharp. Arguing the same way as for the $ZnCl_2$ case in the beginning of this chapter, we find that the light zinc isotopes and the heavy lead isotopes are enriched on either side of the boundary. If we deposit lead as a metal at the cathode the amount of $PbCl_2$ in the system is reduced and the boundary gradually moves downwards in the column, but this is not desirable in an experiment where we want as much as possible of the column to be filled with $PbCl_2$. In order to keep the boundary in the same place we could try to regenerate the $PbCl_2$ at the cathode by a reaction between the liberated metal and chlorine. It is, however, easier to introduce a third salt, e.g. LiCl, between the $PbCl_2$ and the cathode and regenerate LiCl. A system with $ZnCl_2$ (melting point 262°C), $PbCl_2$ (501°C) and LiCl (613°C) must be run at a temperature of at least 620°C. We can reduce the operating temperature to about 520°C if we replace the LiCl by a low melting mixture of LiCl and KCl (eutectic point 352°C). KCl has an extrapolated conductivity slightly lower than $PbCl_2$ [L 5] but we can expect the big difference in density to prevent too much mixing of $PbCl_2$ and KCl.

---

[1] The determination of Zn by ion exchange was suggested by Mr. Per Pettersson, who analysed the samples chemically.

Thus we have worked out a system

$$\text{cathode}+Cl_2/LiCl+KCl/PbCl_2/ZnCl_2/\text{anode}+Cl_2.$$

For a run with this system we used a cell of Pyrex glass with Supremax glass for the separation column. (Fig. 2) The $PbCl_2$ was first filled in the cell and fused under vacuum. On the melt in the wide tube we put a thin layer of lumps of LiCl which had been prepared by melting under vacuum to remove all moisture. Onto this layer of LiCl we filled similarly prepared lumps of the eutectic up to the desired height. The layer of pure LiCl prevented the (KCl+LiCl) lumps to be partly dissolved in the $PbCl_2$ before they had melted. Now the LiCl layer was slowly dissolved from both sides by the $PbCl_2$ and the (KCl+LiCl) melts, and we got a fairly sharp boundary between these two melts. The temperature was the whole time about 530°C. At last we filled the anode compartment with $ZnCl_2$ which had been prepared by leading Cl_2 gas over molten Zn metal. The $ZnCl_2$ melt was clear and transparent, which proved that the salt had been free from moisture. We evacuated the cell to remove gas trapped in the column. Two arc lamp carbons were used as electrodes. The system was electrolyzed for 7 days. (For data of the run see table 1) The whole time dry chlorine gas was led through the cell to keep a chlorine atmosphere above the melt. The alkali metal depositing at the cathode was thus instantaneously converted back to the chloride. The boundary $KCl+LiCl/PbCl_2$ in the wide cathode compartment was diffuse and a certain mixing took place. Thus some lead metal was obviously deposited at the cathode because we got a few drops of molten lead in the bottom of the wide tube. By weighing this lead when dividing the cell after the run, we found that it corresponded to 2 per cent of the quantity of electricity. The boundary $ZnCl_2/PbCl_2$ in the column became quite sharp as soon as we switched on the current. During the whole week this boundary moved upwards about 1 cm, probably because the $ZnCl_2$ volume

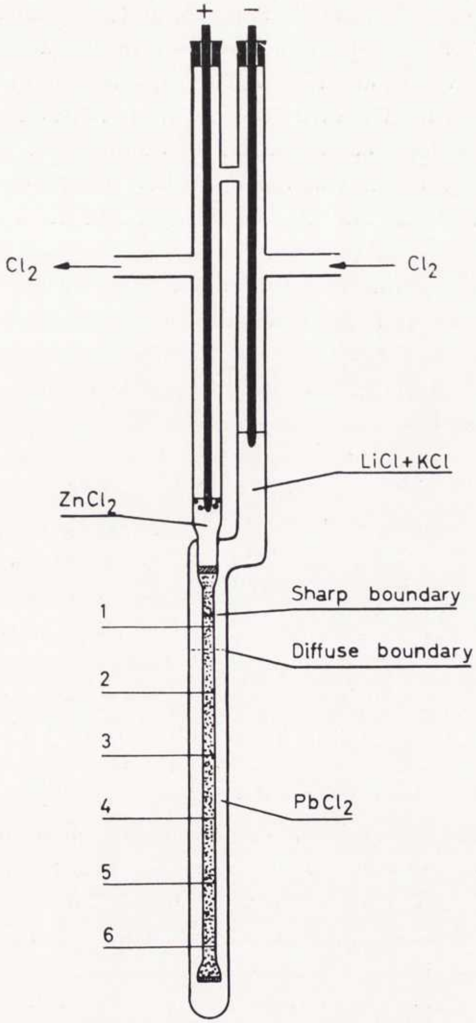
+
−
Cl_2
Cl_2
LiCl+KCl
$ZnCl_2$
Sharp boundary
1
Diffuse boundary
2
3
4
$PbCl_2$
5
6

Fig. 2. Cell used for enriching the heavy isotopes of lead by electrolyzing the system: cathode$+Cl_2/LiCl+KCl/PbCl_2/ZnCl_2/$ anode$+Cl_2$. The boundary between $PbCl_2$ and $ZnCl_2$ in the separation column was sharp, but there was only a very diffuse boundary between the alkali and the lead chlorides in the wide tube. After the run the separation column was divided into 7 samples.

in the anode compartment was reduced considerably by sublimation.

After the run we divided the column into seven samples which were weighed and crushed before being boiled in ammonium acetate (30%

solution) to dissolve the salt. The remaining glass was weighed, thus giving us the total amount of salt in the samples. $PbSO_4$ was precipitated and we found that only the top sample (no 1) contained both $ZnCl_2$ and $PbCl_2$ while the other samples only held the latter salt. The $PbSO_4$ was dissolved in ammonium acetate and PbS was precipitated in the solution. The PbS was analyzed in a mass spectrometer at the University of Berne, Switzerland. The results of the analysis are given in table 5.

The described experiment is typical for work with systems of several salts where the isotopes are enriched at a boundary in the separation column. As a further example we can take the system used for enriching the light lead isotopes: cathode+$\mathrm{Cl_2/LiCl/\mathbf{Pb}Cl_2/Cl_2}$ anode [L 4]. Other systems used are

cathode $\mathrm{Pb/PbCl_2\vdots\mathbf{Li}Cl/PbCl_2/Cl_2}$ anode [K 13]
cathode $\mathrm{Pb/PbCl_2\vdots LiCl/\mathbf{Cd}Cl_2/Cl_2}$ anode [K 14]
cathode $\mathrm{Tl/\mathbf{Tl}Cl/ZnCl_2/Cl_2}$ anode [K 15]
cathode $\mathrm{Pb/PbCl_2/\mathbf{Zn}Cl_2/Cl_2}$ anode [K 16]
cathode $\mathrm{Pb/PbBr_2/\mathbf{Zn}Br_2/Br_2}$ anode [K 17]
cathode+$\mathrm{Cl_2/LiCl/\mathbf{Ag}Cl/Cl_2}$ anode [F 1]
cathode+$\mathrm{Cl_2/LiCl+KCl\vdots\mathbf{Cu}Cl/PbCl_2/Cl_2}$ anode [L 5]
cathode+$\mathrm{Br_2/\mathbf{Li}Br/PbBr_2/Br_2}$ anode [L 7]
$\vdots$ indicates a diffuse boundary.
Data for these experiments are given in the tables. 1—13.

TABLES

Table. 1. Experimental data for the enrichment experiments. The voltage is

Experiment	LiCl	$CdCl_2$	TlCl	AgCl
Reference	K 13	K 14	K 15	F 1
Enriched isotopes	heavy	light	heavy	light
Time, hours	48	50	190	50
Mean current, mA	500	550	250	300
Quantity of electricity, Ah	24	27.6	47	14.5
Current density in column, A/cm²	5	5.5	6	
Voltage, V	52—62	95	238—250	48
Column length, cm	22.5	25.5	27	
Column diameter, mm		4	4	
Packing material	quartz	quartz	supremax	supremax
Packing, grain size, mm	0.1	0.1	0.3	0.10—0.12
Free space in packing, %				
Temperature, °C	630	630	430	620
Practical range of enrichment, x_{max}, cm	14	13	10	
Maximal number of theoretical plates, f_{max}			370	
Length of theoretical unit, h, cm			0.03	
Effective coefficient of diffusion, D′ cm²/day	10		4	

Experiment	LiBr	$PbCl_2$	$PbBr_2$	TlCl
Reference	L 7	K 18	C 1	H 1[1]
Enriched isotopes	heavy	light	light	light
Time, hours	14 1/3	168	187	141
Mean current, mA	239	523	447	339
Quantity of electricity, Ah	3.43	88.1	83.5	48.0
Current density in column, A/cm²		4.9	5.3	4.7
Voltage,V	130–180	130	185—190	119
Column length, cm	25	21	20	20
Column diameter, mm	3.9	5.5	5.0	4.2
Packing material	supremax	supremax	pyrex	Al_2O_3
Packing, grain size, mm	0.15—0.20	0.10—0.12	0.10—0.12	0.15—0.22
Free space in packing, %		44	42.5	52
Temperature, °C	590	520	400	450
Practical range of enrichment, x_{max}, cm	10	8.5	9	10
Maximal number of theoretical plates, f_{max}	35	270	275	310
Length of theoretical unit, h, cm	0.3	0.03	0.03	0.03
Effective coefficient of diffusion, D′ cm²/day	50	3.3	3.3	5.4

---

[1] The TlCl run quoted here was made at the Max Planck Institute in Mainz by W. in connection with a more complete study of the enrichment of ^{35}Cl in TlCl.

ither given as the mean voltage or as the limits corresponding to the mean current.[1]

ZnCl_2	**Zn**Br_2	**Cu**Cl A	**Cu**Cl B	**Pb**Cl_2 A	**Pb**Cl_2 B
K 16	K 17	L 5	L 5	L 4	L 4
light	light	heavy	heavy	heavy	light
72	58	70	80	169	235
230	140	194	196	226	220
16.6	8.1	13.5	15.7	38.3	51.6
4.3	2.75	4.1	3.5		
250—350	400—430	54	49	100—120	77—105
21	23	17	17	17	22
4.1	3.75	3.8	4.1		3.8
supremax	quartz	quartz	supremax	supremax	supremax
0.15—0.20	0.15—0.20	0.15—0.20	0.20—0.25	0.20—0.25	0.15—0.20
41	46		42		
650	500	535	530	530	640
4	8	8	5.5	5	7
208	90	80	110	270	320
0.02	0.09	0.1	0.05	0.02	0.02
1.7	8.4	7.0	2.9	1.1	1.6
ZnCl_2	**Li**NO_3 A	**Li**NO_3 B	**Li**NO_3 C	**Li**NO_3 D	**K**NO_3
L 6	L 2	L 2	L 2	L 2	L 3
light	heavy	heavy	heavy	heavy	heavy
198	99.5	118	48	74	145.5
215	100	75	173	243	101
42.6	9.93	8.88	8.30	18.18	14.6
3.6	0.78	1.0	2.5	4.5	1.6
415	42	48	76	150	82
20	22	22	26	22	22
4.0	6.0	4.7	4.5	4.15	4.1
supremax	quartz	quartz	quartz	quartz	quartz
0.10—0.12	0.20—0.25	0.20—0.25	0.10—0.12	0.20—0.25	0.20—0.25
47	46	42	44		47
600	300	300	300	270	360
8.5			3.6	8.4	7.6
215			24	41	77
0.04			0.15	0.2	0.1
2.8			2	7.2	3

Herzog and the author. The chemical and mass analyses were made by Herzog alone

Table 2. Analysis of **Zn**Cl_2 run. The abundances given are adjusted values. For complete data see [K 16].

Sample	$ZnCl_2$ mg	Relative abundances					f_n
		64	66	67	68	70	
1	124	100	38.2	4.60	17.4	0.40	166.6
2	148	100	47.1	6.28	26.2	0.73	79.4
3	398	100	54.2	7.74	34.5	1.10	20.4
Normal	—	100	56.90	8.32	38.05	1.27	—

Table 3. Analysis of **Zn**Br_2 run. The abundances are adjusted. [K 17].

Sample	$ZnBr_2$ mg	Relative abundances					f_n
		64	66	67	68	70	
1	279.9	100	45.35	6.31	24.61	0.78	65.3
2	312.8	100	53.05	7.98	33.57	1.24	19.2
3	477.9	100	55.39	8.46	36.23	1.39	7.86
4	840.5	100	55.47	8.52	36.58	1.41	6.42
Normal	—	100	56.90	8.32	38.05	1.27	—

Table 4. Analysis of the runs **Cu**Cl A and B. For complete data see [L 5].

Sample	CuCl mg	Percentage ^{63}Cu			f_n
		Measured		Mean	
A:2	235.2	64.5	65.7	65.1	62.1
:3	595.1	66.8	66.9	66.85	34.2
:4	515.6	67.8	67.8	67.8	18.8
:5	317.3	68.2	69.0	68.6	5.6
B:1	171.4	65.6	63.2	64.4	92.3
:2	289.5	66.5	65.5	66.0	60.5
:3	416.4	66.4	67.5	66.95	41.2
:4	374.5	68.9	68.2	68.55	8.2
Normal	—	—	—	68.94	—

Table 5. Analysis of the run **Pb**Cl$_2$A. [L 4]. The mass analysis was made in Berne by P. Eberhardt and P. Signer.[1] The error is quoted as three times the root-mean-square error.

Sample	PbCl$_2$ mg	Relative abundance								f$_n$
		measured				adjusted				
		204	206	207	208	204	206	207	208	
1	243.3	5.355 ± 0.015	100	91.10 ± 0.23	227.15 ± 0.35	5.34	100	91.07	227.2	241.8
2	590.0	5.44 ± 0.015	100	90.25 ± 0.1	223.1 ± 0.55	5.44	100	90.24	223.1	163.7
3	520.0	5.545 ± 0.01	100	89.3 ± 0.12	218.05 ± 0.55	5.57	100	89.24	218.2	67.5
4	678.4	5.635 ± 0.01	100	88.7 ± 0.1	215.45 ± 0.5	5.63	100	88.61	215.5	13.8
Normal		5.655 ± 0.015	100	88.54 ± 0.16	214.8 ± 0.3	5.655	—	—	—	—

Table 6. Analysis of the run **Pb**Cl$_2$B [L 4]. The mass analysis was made in Bonn by H. Fr. Ehrenberg and G. Horlitz.[1] The error is quoted as three times the root-mean-square error.

Sample	PbCl$_2$ mg	Relative abundance								f$_n$
		measured				adjusted				
		204	206	207	208	204	206	207	208	
1	265.0	6.12 ± 0.02	100	85.7 ± 0.2	199.9 ± 0.4	6.12	100	85.9	199.5	312.7
2	461.1	6.10 ± 0.02	100	85.9 ± 0.2	201.0 ± 0.4	6.09	100	86.2	200.6	289.8
3	549.0	5.77 ± 0.04	100	87.8 ± 0.1	210.3 ± 0.6	5.82	100	88.1	209.8	91.5
Normal	—	5.70 ± 0.02	100	89.0 ± 0.3	214.2 ± 0.3	—	—	—	—	—

---

[1] The mass analysis is specially acknowledged in the tables 2—13 only when a report on the experiment has not yet been published elsewhere.

Table 7. Analysis of $PbCl_2$ run. [K 18].

Sample	$PbCl_2$ mg	^{37}Cl %	f_n
1	745	14.1±0.2	238.4
2	1831	17.9±0.2	139.9
3	1662	22.2±0.2	46.5
4	1630	24.4±0.2	3.8
Normal	—	24.6	—

Table 8. Analysis of the $PbBr_2$ run. The abundances were measured in three ways. A. With mass spectrometer. B. ^{80m}Br activity induced by neutron irradiation. C. ^{82}Br activity induced by neutron irradiation. The error quoted is calculated at the 95 per cent confidence level [C 1].

Sample	$PbBr_2$ mg	Percentage of ^{79}Br			f_n
		A	B	C	
1	1480.4	56.500±0.008	55.5±1.0	55.6±1.0	220.4
2	1394.6	53.621±0.009	52.7±1.0	53.4±0.9	115.7
3	1401.6	51.699±0.007	51.4±1.0	51.6±0.9	46.3
4	1317.9	50.868±0.004	51.2±1.5	51.0±1.0	16.3
Normal		50.414±0.002			

Table 9. Analysis of TlCl run. Both chemical and mass analysis made by W. Herzog in Mainz [H 1].

Sample	TlCl mg	^{37}Cl %	f_n
1	853	8.5	263.9
2	1523	14.5	137.5
3	1296	19.8	58.6
4	1286	23.2	16.2
5	1319	24.0	6.8
Normal	—	24.6	—

Table 10. Analysis of $ZnCl_2$ run. Mass analysis made by W. HERZOG in Mainz[1]. Sample 9 contains the top part of the column and also part of the cathode compartment. The high percentage of ZnO for this sample can be explained by sedimentation of oxide onto the fritted glass disc. The maximal deviation between two abundance measurements on the same sample was 0.1 per cent ^{35}Cl.

Sample	$ZnCl_2$ mg	ZnO mg	^{37}Cl %	f_n
1	366.4	—	17.55	177.2
2	315.3	8.6	19.7	118.3
3	275.8	7.7	22.55	47.2
4	295.4	9.5	24.1	11.3
5	289.0	10.3	24.6	—
6	403.6	12.3	—	—
7	396.9	13.8	—	—
8	396.9	13.9	—	—
9	5865.2	327.2	—	—

Table 11. Analysis of the runs $LiNO_3$ C and D. For runs A and B see [L 2]. The error in the mass analysis is given on the 95% confidence level.

Sample	$LiNO_3$ mg	^{6}Li %	f_n
Normal		7.4	
C:0	117.2	6.09 ± 0.18	24.0
1	123.8	6.21 ± 0.19	21.6
2	166.5	6.21 ± 0.19	21.6
3	321.6	6.25 ± 0.19	20.8
4	388.1	6.36 ± 0.19	18.7
D:0	162	6.05 ± 0.22	31.7
1	304.6	5.70 ± 0.21	41.0
2	225.2	5.70 ± 0.21	41.0
3	186.6	5.69 ± 0.21	41.3
4	261.4	6.36 ± 0.20	23.9
5	354.4	6.66 ± 0.27	16.6
6	219.4	6.79 ± 0.27	13.6
7	498.1	7.25 ± 0.29	3.2

---

[1] The mass analysis is specially acknowledged in the tables 2—13 only when a report on the experiment has not yet been published elsewhere.

Table 12. Analysis of the **KNO_3** run [L 3]. The error in the abundance is the standard deviation.

Sample	KNO_3 mg	^{41}K %	f_n
1	316.1	7.64 ± 0.03	76.8
2	239.6	7.60 ± 0.03	73.7
3	155.1	7.15 ± 0.03	37.9
4	267.8	6.86 ± 0.03	13.7
5	422.5	6.72 ± 0.03	1.7
Normal	—	6.70	—

Table 13. Analysis of the **LiBr** run [L 7]. The abundance yield of sample 8 is taken as the normal yield. The error quoted is the standard deviation. The mass analysis was performed at A.E.R.E., Harwell, England by dr. G. H. PALMER.[1]

Sample	LiBr mg	$PbBr_2$ mg	$^7Li/^6Li$	f_n
1	51.47	2037.18	14.30 ± 0.05	3.46
2	213.49	709.51	45.30 ± 0.20	32.77
3	470.28	46.01	24.25 ± 0.07	16.89
4	351.13	16.33	13.83 ± 0.05	2.61
5	257.87	62.62	12.66 ± 0.04	0.36
6	347.66	59.63	12.52 ± 0.03	0.08
7	341.01	11.34	—	
8	4686.6	23.32	12.48 ± 0.05	

---

[1] The mass analysis is specially acknowledged in the tables 2—13 only when a report on the experiment has not yet been published elsewhere.

CHAPTER III

Theory of the isotope enrichment process

Klemm has treated the enrichment theory in several papers [K 20, K 21, K 22, K 23], both the general theory — common for his method and other methods such as thermal diffusion and centrifugation [K 20] — and the special theory for his method. Independent of Klemm, and in connection to the work with electromigration in aqueous solutions [B 1, B 2], theoretical studies have been carried out by Westhaver [W 2] and by Breit and Friedman [B 3]. We shall here only review the basis of the theory and discuss some results and formulae of importance for interpreting the experimental data. We shall in general follow the notation as used by Klemm. For a few of the most important quantities we shall also give his German term in brackets.

Consider a melt of a salt of a polyisotopic element. Two of the isotopes have the concentrations n_j and n_k, the corresponding ions having the velocities w_j and w_k. We then define the separation coefficient (or elementary process separation factor; in German: Elementareffekt)

$$q_{jk}=\frac{w_j}{w_k} \tag{1}$$

By some process (in our case by introducing an electric field) we change the concentration ratio from n_j°/n_k° to n_j/n_k. We then define the (over all) separation factor ("Trennfaktor") as

$$Q_{jk}=\frac{n_j}{n_k}\cdot\frac{n_k^\circ}{n_j^\circ} \tag{2}$$

Next we introduce the number of theoretical plates ("Vervielfachung"), f, by the equation¹⁾

---

1) For convenience we shall always consider both Q and q as >1, thus we always have $f>0$. If the subscript j means the light isotope, and we enrich this isotope, we use Q_{jk}, but if we enrich the heavy isotope we use Q_{kj} when calculating f.

$$Q = q^f \tag{3}$$

q is always very close to unity, so we can rewrite

$$f = \frac{\ln Q}{\ln q} = \frac{\ln Q}{q-1} \tag{4}$$

Another quantity of interest is h, the length of one theoretical unit, i.e. the length over which the separation factor is equal to the separation coefficient. By this definition we have

$$h = \frac{l}{f} \tag{5}$$

where l is the length over which the total enrichment has been measured. (It should be emphazised that h is not a constant throughout a whole experiment; cf [K 22]).

Now we shall consider a practical case. We have a "one-dimensional" separation column with $ZnCl_2$ along the positive axis and $PbCl_2$ on the negative side. We impose an electrical field in the positive direction. From the discussion in the preceding chapter it follows that we get a sharp boundary between the two melts. By definition we have the boundary at $x=0$ the whole time. We have z zinc isotopes with the individual concentrations n_i; at the beginning n_i° throughout the whole positive space. The coefficients of diffusion D_i are constant. The velocities w_i are measured relative to the chloride ions, the mean velocity being w°. We have $(z-1)$ independent separation coefficients q_{jk}, see equation (1), which are time and space independent, in contrast to w_i, which vary with the field strength.

The sum of the partial streams is at any time.

$$\sum_{i=1}^{i=z} \left[(w_i - w^\circ) n_i - D_i \frac{\partial n_i}{\partial x} \right] = 0 \tag{6}$$

We have z differential equations

$$\frac{\partial n_i}{\partial t} = -(w_i - w^\circ) \frac{\partial n_i}{\partial x} - n_i \frac{\partial w_i}{\partial x} + D_i \frac{\partial^2 n_i}{\partial x^2} \tag{7}$$

There are z initial conditions

$$n_i = n_i^\circ \text{ for } t=0 \text{ and } 0 < x < \infty \tag{8}$$

and z boundary conditions

$$(w_i - w^\circ)\, n_i - D_i \frac{\partial n_i}{\partial x} = 0 \tag{9}$$

$$\text{for } x = 0 \text{ and } 0 < t < \infty$$

This system of equations has only been solved for a few special cases.

First we consider the case where all but one of the isotopes are so rare that their concentrations are very small the whole time. Then we have a constant conductivity, thus also the field strength and the velocities w_i are constant, and the system is reduced to z independent equations

$$\frac{\partial n_i}{\partial t} = -(w_i - w^\circ) \frac{\partial n_i}{\partial x} + D_i \frac{\partial^2 n_i}{\partial x^2} \tag{10}$$

with the z boundary conditions given in (9). When treating this case KLEMM [K 21] takes the solution from a paper by MASON and WEAVER [M 3]. Without quoting the complete solution and KLEMM's discussion of it, we shall only give an expression derived for $\frac{D_j}{D_k} \to 1$ and $w_i/w_k \to 1$

We then have

$$f = \frac{2 w^\circ t}{\sqrt{\pi D t}}\, \psi(\zeta) \tag{11}$$

where

$$\psi(\zeta) = e^{-\zeta^2} - \sqrt{\pi}\, \zeta \,[1 - \Phi(\zeta)] \tag{12}$$

with

$$\zeta_i = \frac{x}{2\sqrt{D_i t}} \tag{13}$$

and

$$\Phi(\zeta) = \frac{2}{\sqrt{\pi}} \int_0^\zeta e^{-\zeta^2} d\zeta \tag{14}$$

It is sometimes convenient to substitute ψ (ζ) with a function ψ (ζ) defined by

$$\left.\begin{array}{ll} \psi'(\zeta) = 1 - \dfrac{2\zeta}{\sqrt{\pi}} & \text{for } 0 < \zeta < \dfrac{\sqrt{\pi}}{2} \\[2ex] \psi'(\zeta) = 0 & \text{for } \dfrac{\sqrt{\pi}}{2} < \zeta < \infty \end{array}\right\} \tag{15}$$

We have $\psi(0)=\psi'(0)=1$

and

$$\int_0^\infty \psi(\zeta)\,d\zeta=\int_0^\infty \psi'(\zeta)\,d\zeta=\frac{\sqrt{\pi}}{4} \tag{16}$$

The practical range of the enrichment is

$$x_{max}=\sqrt{\pi Dt} \tag{17}$$

A slight modification of the case treated here is when we instead of a boundary between two salts in the separation column have an infinite column $0<x<\infty$ with an end volume between $-\lambda$ and 0. This problem has also been treated by Klemm [K 22] for a binary mixture with one common component. If the end volume is small, as compared with the penetration of the enrichment in the column ($\lambda<<\sqrt{Dt}$), we find the same expressions as before for f (11) and x_{max} (17) but if $\lambda>>\sqrt{Dt}$ we have

$$f=\frac{wt}{\lambda} \tag{18}$$

and

$$x_{max}=1.5\cdot\sqrt{Dt} \tag{19}$$

Comparing (17) and (19) shows that the existence of an end volume does not have much influence on the penetration depth, some 15 per cent as a maximum.

Breit and Friedman [B 3] have treated the column of finite length with a constant concentration of the components at one end.

The general binary case where we drop the restriction that one isotope must be rare has been treated by Klemm [K 23] for a column of infinite length. To solve the equation he makes use of a transformation given by Majumdar [M 4]. The solution gives a complicated expression for the concentration of the enriched isotope as a function of time and distance from the closed end of the column (i.e. from the boundary). For our further discussions in the following chapters we are mainly interested in how the separation factor increases at the boundary as the experiment goes on. Klemm gives a graph [K 23, Fig. 1] showing how Q depends on $(w_j-w_k)\cdot\sqrt{\frac{t}{D}}$ for initial concentrations c_0 from 0 to 1.[1] We find that the time required to reach a certain separation factor is longer the rarer the isotope is. Thus attaining $Q=2.5$ when enriching a very abundant isotope ($c_0=1$) requires roughly $^3/_4$ of the time it takes for a very rare isotope ($c_0=0$). The difference in time required increases with the enrichment desired, and if we e.g. want $Q=18$ it takes four times as long for a very rare isotope ($c_0=0$) as it does for a very common isotope ($c_0=1$).

In the same paper [K 23] KLEMM shows that for a column of finite length the maximal obtainable enrichment is limited because after a certain time an equilibrium is reached since we have a constant concentration at the open end.

A suitable practical expression for calculating the separation coefficient can be derived from the following discussion [K 21]. We consider a volume that includes the end volume and such a long section of the separation column that we the whole time have the initial concentrations n_i° at the far end of our section. (If we instead work with a system with more than one salt, our section starts at the boundary).

After a certain time, t, the number of equivalents of one isotope in our volume is

$$N_i = N_i^\circ - S n_i^\circ \frac{w_i - w^\circ}{w^\circ} \int_0^t w^\circ dt \tag{20}$$

where S is the cross section of the opening at the far end of our volume. Now the charge transported through this opening is

$$L = S \cdot F n^\circ \int_0^t w^\circ dt \tag{21}$$

F is the Faraday constant.[2]
These two equations give us

$$\frac{w_i - w^\circ}{w^\circ} = \frac{N_i^\circ - N_i}{N_i^\circ} \cdot \frac{F \cdot N^\circ}{L} \tag{22}$$

---

[1] We have used the symbol n when the concentration is measured as e.g. g/cm^3 or moles/cm^3, while c indicates the relative concentration. $c_i = \frac{n_i}{\Sigma n_i}$

[2] Regarding the symbols N and N_i, we have $N = \Sigma N_i$ e.g. for PbCl$_2$ N means the total number of equivalents of the salt; hence N_{208} and N_{35} are the amounts of ^{208}PbCl$_2$ and Pb^{35}Cl$_2$. Thus $N_{204}+N_{206}+N_{207}+N_{208}=N_{35}+N_{37}$. Also $n^\circ = \Sigma n_i^\circ$.

Now if we consider two isotopes j and k we get

$$\frac{w_j - w_k}{w^\circ} = -\left(\frac{N_j}{N_j^\circ} - \frac{N_k}{N_k^\circ}\right) \cdot \frac{F \cdot N^\circ}{L} \tag{23}$$

One great advantage of this expression is that we can allow convection in our section as long as none of the enriched salt reaches the far end and leaves our volume.

When comparing the enrichments achieved in different salts, we can, of course, compare the separation coefficients or our

$$\frac{\Delta w}{w} = q - 1$$

[w is written instead of w° in (23)], but it is more convenient to introduce the mass effect [K 20]

$$\mu = \frac{\Delta w}{w} \Big/ \frac{\Delta m}{m} \tag{24}$$

(m=mean mass of isotopes)
We shall use this quantity when we compare the different experiments looking for regularities that might help to explain the deeper mechanism that rules the observed effect.

CHAPTER IV

The salts

The electrochemistry of molten salts has been treated in monographs by Lorenz [L 8], Lorenz and Kaufler [L 9] and Drossbach [D 1]. Most other books on electrochemistry devote perhaps one chapter to melts, as e.g. in the book by Kortüm and Bockris [K 28].

When choosing suitable salts for our experiments we must consider several properties, both physical and chemical. (Neglecting here such important factors as price and commercial availability). We shall outline some important factors.

1. *Conductivity*

The salt chosen must have a conductivity at least of the order of $0.1\,\Omega^{-1}\,\mathrm{cm}^{-1}$, otherwise it is difficult to work with such a current density that a measurable enrichment can be achieved in a reasonable time. The respective conductivities determine the arrangement of chains of several salts (cf. chapter II p.13). Fortunately enough for us, the conductivities of very many salts of interest for us are known. For halides see [B 4] or [L 11] and for nitrates [S 4] or [L 11].

For the halides a study by Biltz and Klemm [B 4] has shown general systematics in conductivity and other properties. Their results have been of great value when planning our experiments.

2. *Thermal properties*

The melting point of the salts determines the lowest temperature at which an experiment can be run. Further on in this chapter we shall discuss how the working temperature can be reduced by using salt mixtures. The boiling point must not lie too close above the melting point, and the salt must be stable to decomposing within a certain temperature range. A strong tendency for sublimation can give trouble.

3. *Valences*

If an element has several stable valences, we must prevent oxidation reactions (e.g. $CuCl \rightarrow CuCl_2$) as usually only the low-valency salt has a good conductivity and the highest valency often corresponds to the most volatile compound ($InCl_3$, $SnCl_4$).

4. *Surface tension*

The melt must wet the powder in the column. This caused some trouble for Floberg, Klemm and Lang [F 1] when working with AgCl.

5. *Deliquescence*

It is necessary to work with water-free melts. This is made obvious by a reference to the effects occurring when a melt of moist $ZnCl_2$ is electrolyzed [L 10, D 1 a]. Many halides are very hygroscopic and when heating the moist salt a decomposition to the oxide often occurs to a certain extent. For this reason it is sometimes suitable to synthetize the salt out of the elements, cf. [K 16, K 17]. Other salts, such as LiCl and $LiNO_3$, can be made water-free by melting under vacuum.

6. *Chemical reactivity*

The melt must not attack the cell (specially the column) or electrodes strongly. Molten $LiNO_3$ strongly attacks Pyrex and other glasses containing Na. [S 1, S 2, S 3, C 2, L 2]. However, the melt can be kept for a long time in Supremax glass [L 2] or quartz [H 3].

The problems treated under 5 and 6 are, of course, more a question of choosing the right construction material.

Some attempts to reduce the operating temperature

Instead of using pure LiCl we have sometimes used the low-melting eutectic mixture of LiCl and KCl [Z 2] at the cathode [L 5] (see also chapter II p. 14). If we introduce such a mixture in the column we can expect that the components are separated quickly, the better conducting one moving towards the cathode. If the two salts have small differences both in conductivity and density, we can, however, expect that the demixing takes such a long time that a measureable isotope enrichment can be achieved before the salt solidifies in the column. We shall discuss a possible arrangement for enriching calcium isotopes at a temperature below 772°C, the melting point of $CaCl_2$. If

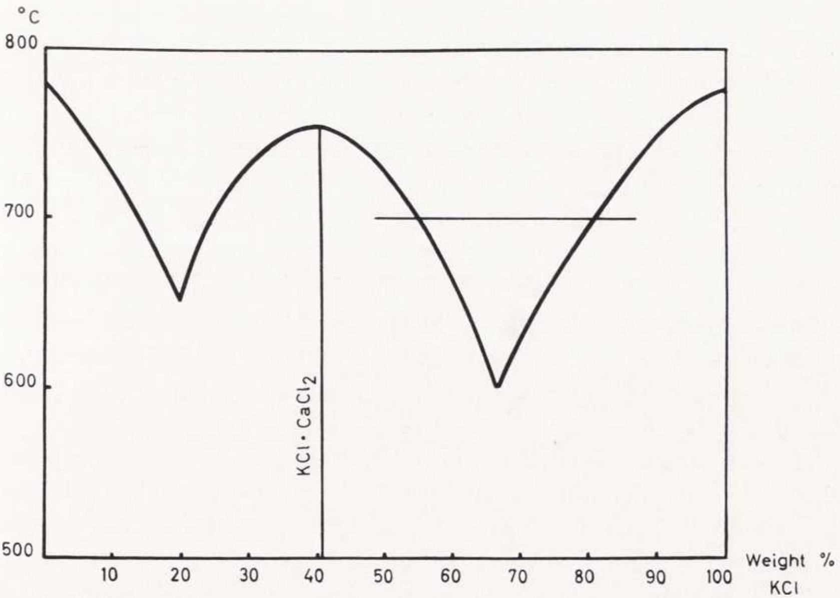

Fig. 3. Phase diagram for the system $CaCl_2$—KCl [M 18]. The horizontal line shows that mixtures with 55 to 80 weight per cent KCl are liquid at 700°C. The melting points for the pure compounds are: $CaCl_2$ 772°C, $KCl \cdot CaCl_2$ 754°C and KCl 776°C.

we compare $CaCl_2$ and KCl, we find that they have only about 10 per cent difference in conductivity ($\varkappa = 2.19$ for KCl at 800° and 1.99 for $CaCl_2$ at 795°C [B 4]). When we compare the densities we find that $CaCl_2$ is slightly heavier. KCl can be expected to have a tendency to be displaced towards the cathode relative to $CaCl_2$. Thus if we have a system cathode$+Cl_2/KCl+CaCl_2/MgCl_2/$anode$+Cl_2$, with the boundary to the $MgCl_2$ in a separation column, we can expect the $CaCl_2$ to be enriched towards the boundary. The phase diagram for the system $CaCl_2-KCl$ is reproduced in fig. 3. If we have a temperature slightly above 700°C in our column, we can start with a melt containing 55 weight per cent KCl and carry on the electrolysis until we have got 80 per cent $CaCl_2$. We can hope to get a measureable enrichment of the heavy calcium isotopes, while the run lasts. This has been only a theoretical argument, where we have neglected the difficulties that might occur for different reasons, such as the density of $MgCl_2$ being between those of KCl and $CaCl_2$.

Other arrangements with binary melts can be expected to give a decrease in operating temperature. If we compare the conductivities of the halides of a metal we find that the conductivity decreases for the series chloride-bromide-iodide. Hence LiCl will be displaced towards the anode and LiBr towards the cathode, when a mixture of LiCl and LiBr is electrolyzed. If we start with pure LiBr and have a chlorine athmosphere at the cathode, we would gradually transform the LiBr into LiCl. LiCl being produced at the cathode, and the Br^-ions being forced towards this electrode, gives us a countercurrent arrangement, where we can expect to have both LiCl and LiBr throughout the whole separation column. It is difficult to predict if the proportions between these two components will be such that we shall have a considerable reduction in melting point throughout the whole column. (For phase diagram see [B 5]).

The study of binary mixtures is of interest also from another point of view than reducing the melting point. The mass effect being higher the greater the mass of the anion, see chapter XV, means that a larger enrichment is reached in a certain time if we start with e.g. $PbBr_2$ and end up with a mixture of $PbCl_2$ and $PbBr_2$, instead of having pure $PbCl_2$ the whole time when enriching lead isotopes. For reasons discussed in chapter VI, it is more difficult to regenerate a bromide or an iodide than a chloride at the cathode. Hence several practical advantages can be obtained if we can have a mixture of chloride and bromide or chloride and iodide throughout the whole column.

These considerations resulted in our electrolyzing LiBr in a cell shown in fig. 4. After the cell had been filled with so much LiBr (lumps prepared by melting under vacuum) that the melt stood about one cm above the upper filter plate, two carbon electrodes were introduced and a stream of chlorine was led through the cathode compartment for some minutes before the current was switched on. As expected, we could notice that the molten bromide decomposed slightly when in contact with the chlorine gas. The bromine liberated at the anode condensed in the cooler parts of the outlet and was collected in a flask cooled with ice. As expected (see p. 61) the level of the melt rose considerably at the cathode and sunk at the anode, although we had a higher gas pressure in the cathode compartment. There was also a total decrease in volume as LiBr was converted into LiCl. We made two runs, the results of which are summarized in table 14. After the run the cells were divided into pieces. By weighing the glass before and after the salt had been dissolved, we got the sum LiCl+LiBr (*a*

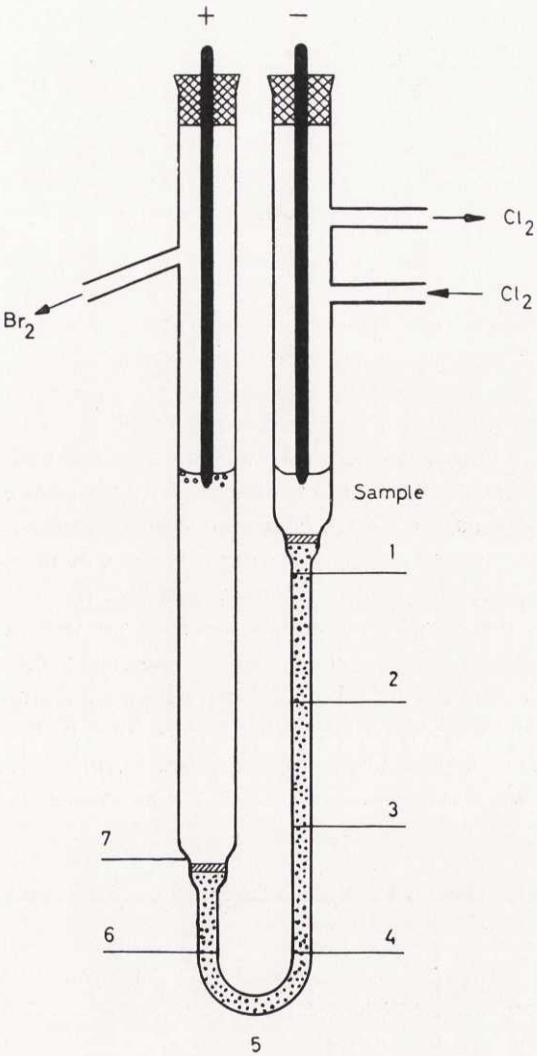

Fig. 4. Cell in which LiBr was electrolyzed, with chlorine circulating through the cathode compartment. After the run the cell was divided into 7 samples as indicated schematically.

grams). AgCl+AgBr was precipitated in the solution and weighed (*b* grams). The mole fraction of chloride is then

$$x = \frac{86.86 \cdot b - 187.80 \cdot a}{44.46\,(b-a)} \tag{25}$$

Table 14. Data of runs with LiBr converting to LiCl.

Run	A	B
Time, hours	$7\frac{3}{4}$	24
Mean current, mA	534 ± 3	550 ± 5
Quantity of electricity, Ah	4.14	13.2
Current density, A/cm²	6.0	5.9
Column length, cm	18.5	20
» diameter, mm	5.0	5.15
Temperature °C	612	600

This method of analysis was used for the 24 hours run (B). For the 8 hours run (A) it was necessary to use another method [T 7], where the precipitated silver halides were treated with potassium dichromate and concentrated sulfuric acid. The oxidation gave chlorine and bromine which were driven off by passing a stream of nitrogen through the flask in which the reaction took place. All the silver remained behind and could be precipitated by adding potassium iodide. The mole fraction of chlorine was computed for each sample.

The results are given in table 15 for both runs. Sample 1 contains the salt from the cathode compartment (A: 6.98 g B: 9.06 g). Samples 2—6 are from the separation column (cf. fig. 4), which held about 4 g of salt. There were about 42 g in the anode compartment (sample 7).

Table 15. Chemical analysis of the runs quoted in table 14.

Sample	LiCl molar %		LiCl millimoles	
	A	B	A	B
1	91.9	98	139.5	206.9
2	31.5	95	3.4	12.4
3	3.4	93	0.29	14.1
4	1.8	84	0.16	13.0
5	0.2	34	0.03	4.6
6	3.4	27	0.24	4.8
7	0.0	37	0	220.4
LiCl, sum millimoles			144	476
LiCl, expected millimoles			155	489

A comparison of the two runs shows that most of the salt in the cathode compartment is converted into chloride before there is any great change in the column and anode compartment. The composition is not at all the same throughout the whole column while the exchange takes place.

We also calculated the moles of LiCl as determined by the analysis and compared with the amount to be expected in the melt, if no LiCl had been decomposed at the anode. As seen from table 15, the agreement between these two values is good. The deficits (7 and 3 per cent respectively) are within experimental error, including salt lost by sublimation. There was thus no considerable liberation of chlorine at the anode. This is in agreement with what could be expected from the fact that the decomposition voltage is lower for LiBr than for LiCl [G 1].

The conclusion from these two trials is, that it is not very likely that an arrangement of this type can be used for reducing the operating temperature considerably, at least not for long runs, but that it should be possible to obtain in this way a higher "over-all" mass effect than for a pure chloride. If the amounts of salts on both sides of the column are chosen correctly, we can hope to retain during most of the run a fairly pure iodide or bromide at, say, a boundary between lead and lithium salts.

CHAPTER V

Electrical circuits[1]

Electricity is consumed both for heating and for electrolyzing the salts.

The ovens are made of two concentric glass tubings (Pyrex, usually 30—60 cm long and 4—6 cm wide) with flat resistance wire (Kanthal D[2] 2.0 × 0.2 mm) wound round the inner tubing. The turns are about 1 cm apart; thus it is easy to observe the cell in the oven. The heating current is adjusted by a variable transformer. The temperature in the oven is controlled by a thermocouple connected to a regulator (Wheelco 221 Capacitrol or AEG Stufenregler), which shortcircuits a resistor in series with the oven, thus balancing the heating current between two values on either side of the "right" value. For circuit diagram see [K 16]. If the AC voltage fails, the heating is automatically shifted over to DC. A failure of heating is dangerous only if the cell cools down so much that the melt begins to solidify before the heating current returns. Remelting of the salt means a volume expansion that usually bursts the cell.

Usually a second thermocouple is connected to a recorder (Negretti & Zambra, type E/1304), which also registers the DC-voltage across the cell. The recorder thus gives us a check on what is going on when the run is not under visual observation.

The voltage for the electrolysis is usually taken from the DC-mains (240 V or 120 V), but when having the column filled with zinc salts ($ZnCl_2$, $ZnBr_2$, $ZnCl_2$) we used a transformer-rectifier unit giving up to 750 V. [K 16]. To reach the desired enrichment in the shortest time possible, the current through the cell should be kept at a high and constant value. Thus we want to compensate for changes in the resistance of the melt, caused e.g. by the boundary moving in the column. In the **$ZnCl_2$** and **$ZnBr_2$** experiments we used an electronic stabilizer [K 16][1] to keep the current stable. The quantity of electricity was determined by weighing the lead deposited at the cathode. In the following experiments the electronic device was replaced by ballast lamps (Philips Miniwatt C 8, 200 mA) [L 5]. As long as we were working with an arrangement where the whole current passed through both melt and stabilizer, the quantity of electricity was determined accurately enough merely by multiplying time and current (**$CuCl$**).

---

[1] In the following chapters we shall treat certain features of the general experimental techniques as used in Gothenburg. Of course we cannot quote all the minor deviations in the arrangements of the single trials.

[2] made by AB. Kanthal, Hallstahammar, Sweden.

For reasons discussed in chapter XII (p. 71), we, however, found it valuable to have a resistance (3000—8000Ω) in parallel with the cell as a bleeder, normally taking a few per cent of the total stabilized current (See circuit diagram fig. 5). Of course now the current through the cell fluctuated a little more than before, and there was need for introducing a special instrument for registering the quantity of electricity. We chose a mechanical ampere-hour meter (Siemens-Schuckert, type A 3), calibrated for currents of the order of 200 mA. In the **$PbCl_2$** experiments we checked the ampere-hour readings by an integration over time for the currents read on our mA-meter. When working with nitrates we sometimes had such low currents that the ampere-hour meter did not register the amount of current correctly. For this reason we began to use copper coulometers [M 5]. We, however, kept the ampere-hour meter in our circuit as a control that the current was fairly stable between our instrument readings. We have sometimes added a commercial electrolytic coulometer (Siemens-Schuckert, type E 2, reconnected for low currents) in series with the copper coulometer and mechanical meter. In many experiments (**$ZnCl_2$**, **$ZnBr_2$**, $PbCl_2$, $TlCl$, $ZnCl_2$) a metal, usually lead, is deposited at the cathode. The quantity of electricity can of course be determined by weighing this metal. The agreement with the Cu-coulometer value is usually good, cf. p. 12.

Thus sometimes we determine the quantity of electricity in three or four ways for the same experiment. Thanks to this on one occasion (an unpublished trial) we could calculate how long time the copper coulometer had been shortcircuited by a fringe of copper bending out from a nearly dissolved coulometer anode.

Measuring the voltage over the cell gives valuable information on what is happening, e.g. how the boundary is displaced in the column. The voltage being, however, of less interest for the evaluation of the experiment than the quantity of electricity, permits us to place the voltmeter across both the cell and the low-ohmic instruments. As already mentioned we have often registered the voltage by connecting to the temperature recorder via high ohmic resistances.

---

[1] The circuit shown in K 16 fig. 3 is not quite correct as the two leads from the 500 Ω resistance to the 6AC7 valve have been interchanged in the diagram.

A circuit diagram typical for the runs with $\mathbf{LiNO_3}$, $\mathbf{KNO_3}$, $\mathbf{PbCl_2}$, $\mathbf{PbBr_2}$ and $\mathbf{ZnCl_2}$ is given in fig. 5.

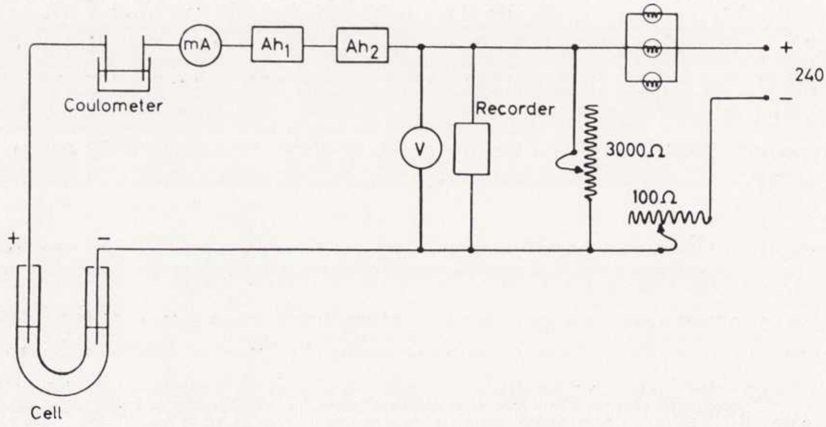

Fig. 5. Circuit diagram showing how the current was controlled by ballast lamps and measured with a milliammeter (mA), a copper coulometer, and (occasionally) two commercial ampere-hour meters (Ah_1 and Ah_2). The voltmeter (V) and recorder give the voltage including these current instruments.

CHAPTER VI

The electrodes

The electrode arrangements used are of several types, depending on properties of the melts and on the aim of the experiment. We shall first give a general classification before we discuss special problems.[1] We can, of course, make a distinction between electrodes for halide and nitrate melts, but we can also group them in the following way:

A. Anodes:

a) liberation anodes. The gas liberated (Cl_2, Br_2, NO_2+O_2) leaves the cell.

b) dissoluble anodes. An anode consisting of a molten metal (Pb, Tl, Zn, etc.) is dissolved quantitatively "in statu nascendi" by the discharged anions. This arrangement has been used in all enrichments of halide isotopes [K 18, C 1, H 1, L 6].

B. Cathodes:

a) regeneration cathodes. The liberated metal (usually Li or K) reacts immediately with a gas in the cathode compartment (Cl_2, Br_2, NO_2+O_2) and the salt is regenerated.

b) deposition cathodes. The metal is deposited as a melt. (Some arrangements tried for metals with high melting points are discussed below.)

Starting with the anodes we find that, except when dissoluble anodes were used, carbon rods (usually commercial arc lamp carbons) have been used in all halide work. For the nitrates HOOVER & HOLLOWAY [H 3] used a thin strip of rhodium, while we used a platinum wire, [B 6], 2 or 3 cm long and welded to the end of a copper wire running inside the glass rod into which the platinum wire was melted. [L 2, L 3]. We have, however, tested a few other materials as anodes with the following results:

---

[1] In all the trials of cathode arrangements discussed in this chapter, we have always had the possible use for enrichment experiments in view. Thus we have started by testing the arrangement that is easiest to build on to cells of the type used for isotope enrichment. This is why we have always had the highest current densities in the first trials. We have desisted from building and testing so complicated cathode arrangements that they could not have room together with the rest of an enrichment cell in an oven of the usual type.

1. Carbon was dissolved in $LiNO_3$; cf. [M 6].
2. Stainless steel was attacked by $LiNO_3$.
3. Tantalum was attacked seriously by $LiNO_3$. The surface was probably covered by a layer of oxide, giving strong local heating at those spots where the current passed through.
4. Palladium was dissolved completely by $LiNO_3$.
5. A nickel wire with an electroplated layer of rhodium was attacked to a certain extent by the $LiNO_3$ melt; possibly because the coating was too thin.
6. Tungsten wire was dissolved by KNO_3.
7. Aluminium was also tried as an anode in KNO_3. As expected we got an insulating layer of Al_2O_3 causing a big increase in voltage over the cell and sparks at the anode.

No anode effect [S 5] was observed when working with carbon electrodes in halide melts. Nor was current density critical for our Pt-anodes in nitrates.

A liberation anode cannot be used for a salt such as CuCl, where some of the liberated Cl_2 reacts with the melt, giving an equilibrium $2\ CuCl+Cl_2 \rightleftarrows 2\ CuCl_2$. The suspicion that such an arrangement would not work smoothly was confirmed in a couple of trials with carbon anodes in molten CuCl. After an hour or so anode effects occurred and despite all remedies tried, the only way to keep the run going was to reduce the current very much, far below what would be acceptable for an enrichment experiment. A simple way to avoid the problem was to introduce $PbCl_2$ between the CuCl and the anode [L 5].

As a rule problems concerning the cathodes have cost much more labour than the anodes, and trouble in connection with cathode reactions has been the most common reason for failing success in the runs. At cathodes of the regeneration type, naturally the critical condition is that all the Li (or K) reacts with the gas before it attacks the glass walls of the cell. Hence the distance between cathode and wall must not be too small, and there must always be an excess of the gas the metal is to react with. Carbon is the only material tried in halide melts for this type of cathodes. When working with chlorine the gas from a commercial steel cylinder (EKA, Bohus, Sweden) bubbles through a wash bottle with some H_2SO_4 to show the rate of the gas stream, and passes through a second, empty wash bottle (to trap drops of the acid from coming into the cell) before it is led into the cell some 8 or 12 cm above the melt (see figures 2 and 4). The excess of chlorine leaves the cell together with the Cl_2 liberated at the anode. A wash bottle with a little H_2SO_4 gives a check that the gas stream leaves the cell the right way. It should be mentioned, that usually the cathode is attacked to a certain extent by a LiCl melt; perhaps some makes of carbon were more resistant than others.

The only attempts to regenerate LiBr were made in some runs with the system cathode $+Br_2$/**Li**Br/$PbBr_2$/anode$+Br_2$ [L 7]. The bromine gas stream was produced by an arrangement used in the **Zn**Br_2 experiments [K 17]. A stream of argon was led through liquid bromine in a round bottom flask standing in a beaker with water heated by means of an immersion heater, controlled by a contact thermometer. It was, however, difficult to keep a stable stream of bromine gas by this system. In the first run the bromine was let in at the same height above the melt as we used to do when working with chlorine. This arrangement did not work, because the Li was not consumed quickly enough by the bromine to prevent the glass from being attacked. In the next run we let in the bromine in the cathode compartment just above the melt, but this also was a failure because our inability to regulate the gas stream caused the hot glass walls of the cell to crack when struck by blows of cold bromine gas. In our third run we used a graphite pipe (30 cm long with 5 and 11 mm inner and outer diameter) through which the Br_2 bubbled into the melt. Even with this arrangement we could not convert all the Li back to LiBr (probably to a certain extent due to the difficulties in controlling the bromine stream). It was, however, possible to keep the experiment going for such a long time as we considered necessary to get a well measurable enrichment (see tables 1 and 13). It can be mentioned that the bromine excess was trapped in an ice-cooled flask (cf. p. 34).

When working with nitrates, metal cathodes are used. Stainless steel is suitable for $LiNO_3$, as already found by HOOVER and HOLLOWAY [H3] but is attacked by KNO_3, in which melt aluminium is not attacked [L 3]. In other tests we found that tantalum could be used in $LiNO_3$, but that carbon was attacked by this melt; cf. [M 6, B 6]. The reaction between Li and gas does not run as smoothly in the nitrate as in the chloride case, quite naturally when considering the temperature differences and the more complicated reaction mechanism for the nitrate. If the current density is above 0.1 A/cm_2 (for 280—300°C; preliminary experiments indicated that the limit is considerably higher at e.g. 400°C[1]) there is a tendency for dendrites growing out from the cathode. Such lumps on the cathode were very annoying, because they could suddenly burn up (specially if the cathode was taken out of the melt) giving such violent flashes that the glass walls of the cell cracked. We do not know the composition of these outgrowths (nor do we do that for the black stuff often appearing in the cathode volumes when working with LiCl or LiBr). They are not likely to be pure lithium metal as the temperature is above 186°C (the melting point). If they were Li-Fe compounds, the steel should have been corroded, and we should have been able to detect iron in the $LiNO_3$ after the run. Bogorodski [B 6] has suggested that the lumps are lithium oxides, but then we would not expect the dendrites to grow downwards into the melt, nor to burn as violently as they do when taken out of the melt. We did not notice any dendrites when working with aluminium cathodes in KNO_3.

Regeneration cathodes are used conveniently when the metal is lighter than the salt and has a low melting point. If the metal is heavier than the salt, it will not flow up to the surface and react with the gas, cf. p. 14. For metals with low melting points it is easy to have the cathode in a sack, big enough to hold the metal deposited during the whole run, cf. p. 11 and [K 16, K 17, K 18, C 1 and H 1]. Most of our experience comes from depositing lead. We have often noticed that the otherwise yellow $PbCl_2$ melt gets black from dissolved Pb. We can usually stop the solution to spread throughout the whole $PbCl_2$-melt, by contracting the cross-section of the connection between the sack and the cell proper. It is likely that the higher current density at the contraction stops the diffusion of the dissolved lead. The solubility of metals in fused salts has been studied in many connections. A survey of the field has been given by Lorenz and Eitel [L 12]. See also [D 1 b]. It is of special interest to note that Auerbach [A 2] found already in 1901, that we have a real solution and not a suspension of lead in $PbCl_2$. His conclusion was not considered as full evidence [L 12 a], but was proved to be right by the careful investigation by Eitel and Lange [E 2]. For the interesting case of cadmium in $CdCl_2$ reference can be given to [A 2, A 3, L 12 a and D 1 c].

---

[1] The risk for thermal decomposition [C 2] at higher temperatures was the reason for us not to run the experiments at 400°C.

It might be mentioned that cathode polarization [K 29, D 1 d] is of no importance in experiments of our type.

When enriching the light isotopes of chlorine and bromine, the dissoluble anode was pressed against the column, thus giving a negligible end volume, which is favourable for getting rapid results. To enrich the heavy isotopes of these elements, it would be convenient to have a similar arrangement without any large volume between the column and the cathode. To prove the expected difficulty to make a very small cathode compartment, we made a trial with $PbBr_2$ where the lead cathode reached up to the column, packed with Pyrex. An overflow arrangement should keep the deposited lead from pressing against the disc at the bottom of the column. This did not help, however, since we noticed soon after the current was switched on, that the molten lead had passed through the disc, and lead started to deposit in the column. In a couple of hours we had got a string of molten lead, like a "dendrite", that had grown straight through the whole column, which still mainly held molten $PbBr_2$. Obviously the high surface tension stopped the once deposited molten metal from passing down through the column [F 2].

When working with e.g. CuCl or AgCl, the metal has a much higher melting point than the salt. We have then been forced to work with a salt such as LiCl as an auxiliary melt at the cathode. Hence, in our first trials with **Cu**Cl we had a boundary LiCl/CuCl in the volume above the separation column (the cathode volume). The current density was 0.2—0.3 A/cm^2 at this boundary. However, some CuCl always diffused to the cathode and caused long dendrites to grow rapidly through both the cathode volume and the CuCl-filled part of the column down to the $PbCl_2$. For this reason we replaced the LiCl by an eutectic mixture of KCl and LiCl, thus reducing the necessary temperature from 620° to 530°C. Probably because of the decrease in diffusion, we did not have any more trouble with copper-dendrites from the cathode.

We have, so far in vain, given considerable effort to developing cathodes at which Cu or Ag can be deposited without giving dendrites. According to earlier investigators [A 4, K 30] it is possible to get smooth deposits, when working with low current densities. Kroll [K 30] gives the limit 40 mA/cm^2. On one occasion we had a copper plate as cathode (see fig. 6) when electrolyzing the system $-$ Cu/CuCl/$PbCl_2$/Pb$+$ at 530°C. After 20 hours with 18 mA/cm^2 at the cathode we cut the cell into pieces. Even if most of the copper had deposited on the plate, there was, however, a long dendrite going straight through

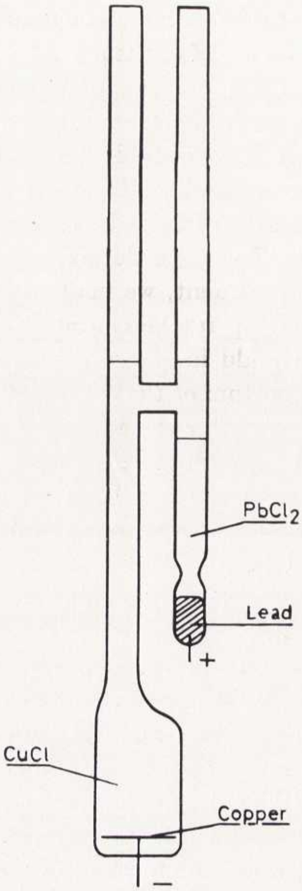

Fig. 6. Cell in which copper was deposited on a wide disc. The lead anode is gradually dissolved during the run.

the CuCl. In some other trials we tested different arrangements to stop the dendrites from growing beyond a certain limit, but this work was without success.

Metals like Cu and Ag have several alloys with low melting points. For instance, if we look at the phase diagram [L 13] for the system Ag-Pb, we find that the melting point is below 600°C for alloys with less than about 30 weight per cent silver. Now, it should be possible to deposit Ag so slowly on a cathode of molten lead that the Ag dissolved in the Pb giving the alloy. To try this we made 2 runs with a cell shown in fig. 7. Nitrogen, free of 0_2 [M 7], passed through the cell

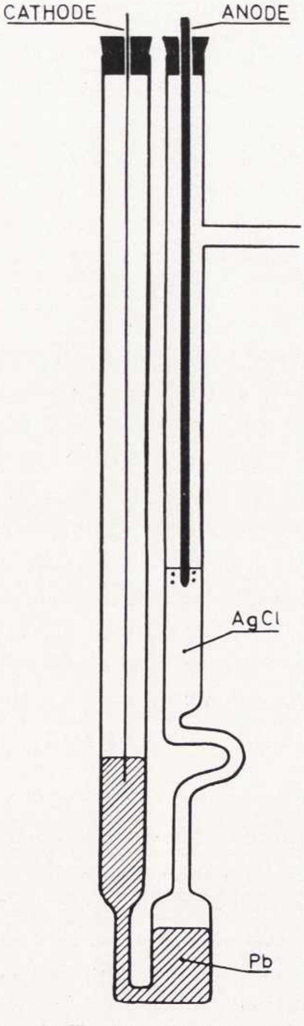

Fig. 7. Cell for electrolyzing AgCl with a lead cathode and a carbon anode. The lead was melted in a filler of the type shown in fig. 9. The bend in the right tube held the unmelted lumps of AgCl in the upper part of the cell. In the first trial the boundary was in the small tube but in the second trial in the wide tube as shown here.

during the whole filling process. Sticks of lead were molten (m.p. 327°C) in the filling apparatus, from which the metal was pressed out into the cell, while the slag stayed in the filler, thus giving an oxide-free lead surface, onto which molten AgCl flowed down, when the temperature was raised above 455°C. After melting the salts, we introduced a carbon anode in the AgCl and connected the lead cathode by means of a tungsten wire. In our first trial, (with a cell slightly different from the one shown in fig. 7) the boundary was in the small tube (diameter 6 mm) and we sent 400 mA through, thus having 1.4 A/cm^2 at the cathode. Dendrites of Ag appeared very soon in the AgCl, and advanced towards the anode at the rate of about 1 cm/min! In the next trial we had the boundary in the wide tube (21.4 mm diam.) as indicated in fig. 7. We sent 205 mA through, thus having only 0.057 A/cm^2. Still we got fast growing dendrites.

It is possible that a systematic study will give cathodes at which Ag and Cu form molten alloys as they are deposited at low current densities. Our trials with Ag-Pb have only shown, that there are difficulties to overcome before an arrangement suitable for our experiments is developed. (cf. footnote on p. 41). LORENZ [L 8 a] electrolyzed mixtures of molten AgCl with $ZnCl_2$ or $PbCl_2$ where the silver was deposited first, forming dendrites, which were dissolved by the zinc or lead depositing later on. In another experiment he started with a cathode of zinc or lead at which the silver dendrites first formed were dissolved. (The apparatus was shaken gently to make the dendrites disappear). LORENZ [L 8 b, L 10 a] has also used a zinc cathode when electrolyzing a mixture of $ZnCl_2$ and $CuCl_2$ where the copper dissolved in the zinc metal forming brass.

One reason for using regeneration cathodes for Li and K is that we cannot collect the molten metal in quantity because of its strong reactivity. This restricts our field of work considerably. It would thus be very valuable to develop an arrangement where the deposited alkali metal is bound as an inactive compound, or at least diluted so much that its attack on the glass walls is negligible. We have tried a couple of arrangements similar to the described trials with a Pb-cathode for Ag. Because of the low melting point of the nitrates, we found it most convenient to use them when testing our ideas. Mercury cathodes have been found very suitable even in large-scale electrolysis of alkali salt solutions. The usual arrangement is then that the depositing metal forms a low-concentrated amalgam with the mercury, which is circulated and repurified. The construction of such a circulation system for work on our scale would be rather difficult. This should not be necessary, as the cathode compartment can contain so much Hg, that the concentration of e.g. Li is well below say 0.5 per cent even after a long run. $LiNO_3$ melts at 255°C, thus determining our operation temperature to at least 270°C. The phase diagram for the system Li-Hg [L 14] shows that we should be able to collect up to about 1.2 weight per cent Li in the Hg before the amalgam solidifies. Thus when electrolyzing for 48 hours with 250 mA (reasonable values for an enrichment of e.g. ^{7}Li at the anode, cf. [L 2]) we should theoretically need only about 270 g Hg at the cathode. Our main trials were done with the cell shown in fig. 8. We poured 420 g Hg in the cell and filled up with lumps of $LiNO_3$. We heated to 280°C. We got a boundary between the two melts (Hg and $LiNO_3$) about halfway up the small tube (diam. 5 mm). A Pt-anode was introduced and we switched on the current, 200 mA, thus having 1 A/cm^2. We soon got trouble at the mercury cathode because of the evolution of some gas and because a brown or yellow compound was formed (Hg0). We stopped the run, collected the mercury and soaked it with water. As expected we got an alkaline solution, showing us that some Li had formed amalgam. In our next trial with the same type of cell we had only 300 g Hg in the cell, thus giving us the contact between $LiNO_3$ and Hg in the wide tube. We electrolyzed about 30 hours, most of the time with a current density of 0.038 A/cm^2. There were interruptions when gas bubbles rose from the cathode and blocked the small tube. The Hg surface was first smooth but after a few hours the mercury appeared rather dirty and as the experiment went on, more and more oxide was formed. The surface tension of the mercury changed, and the molten metal seemed to be very inhomogeneous. About 5.4 Ah were transferred in all, giving an amalgam with 0.5 weight per cent lithium. The cell was cut into pieces afterwards. The $LiNO_3$ was dissolved and gave a neutral reaction, thus showing that the deposited lithium had not been dissolved (e.g. as oxide) in the molten salt. The mercury was washed to decompose the amalgam, giving us a very alkaline solution. We noted that the amount of brown and yellow oxide produced was much smaller than it seemed during the run. We could not notice that the glass had been attacked by the amalgam, an important difference between the amalgam and pure lithium. From the trials we can conclude that it is possible to use a mercury cathode when electrolyzing $LiNO_3$, but that the process does not run quite smoothly, mainly because of reactions giving mercury oxide and gas.

A mercury cathode should be very suitable for $AgNO_3$ (m.p. 212°C), had it not been for the reaction between Hg and molten $AgNO_3$ observed in a trial.

We decided to extend our investigation to KNO_3. The salt melts

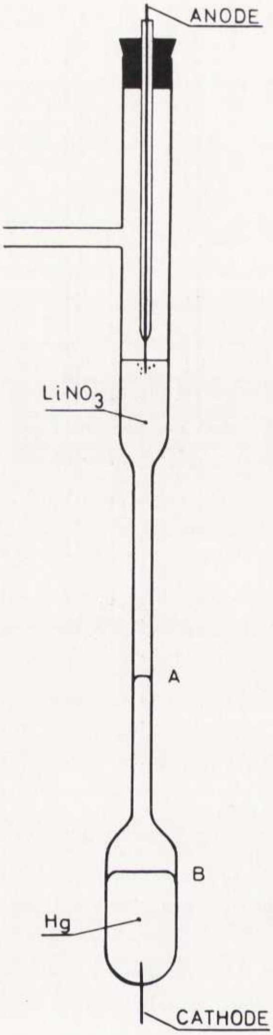

Fig. 8. Cell for electrolyzing LiNO$_3$ with a mercury cathode and a platinum anode. In the first trial the boundary between metal and salt was at A, but in the second trial at B.

at 334°C, only 23° lower than the boiling point of pure mercury (356.9°C). It should be difficult to keep the operating temperature between two such narrow limits over a time of several days, so we decided to try another metal as a cathode. Lead seemed suitable, as K-Pb alloys with up to 6 weight per cent K are liquid at about 350°C

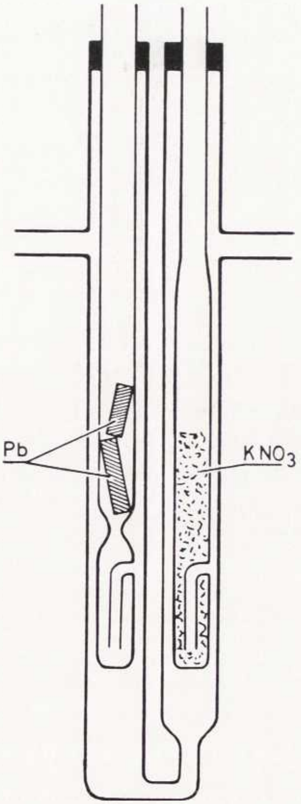

Fig. 9. Cell for electrolyzing KNO_3 with a lead cathode and a platinum anode. Both components were melted in holders from which they were pressed (by nitrogen) into the cell; first the metal and then the salt, giving a boundary in the right tube. The holders were then removed and the electrodes connected.

[L 14 a]. In the main trial we used the cell shown in fig. 9. The lead was melted in the usual kind of holder while nitrogen passed through the cell. After the cell had been filled with oxide-free lead to the desired height, we introduced fused KNO_3 from another holder. No reaction could be noticed at the contact surface between the two melts, but some red oxide soon appeared in the lead. Nevertheless, we switched on the current after inserting the Pt-anode. We started with a cathodic current density of 0.1 A/cm^2. We soon noticed some yellow grains of lead oxide in the molten salt. Gas bubbles evolved from the contact surface, which soon looked very rugged. The KNO_3 melt was gray after an hour, and some hour later the voltage over the cell was some 10 to 15 times higher than at the start. We decreased the current to about half of what we had started with, and kept the experiment going for 8 hours. We noticed how the lead oxide covered the walls of the whole lead-containing part of the cell. The whole run was very agitated, but it is of no value to describe how the running conditions changed all the time. Afterwards we divided the cell and put the pieces in water. We found that the KNO_3 contained very little impurities and that the solution gave a neutral reaction. All the other parts gave very alkaline solutions, showing that the deposited potassium had been dissolved in the lead. There was much oxide in all these samples. It is obvious that lead is not suitable as a cathode for molten KNO_3 and that the lead was destroyed much more rapidly here than the mercury was in the previously described experiment. It might be of interest to mention that metallic lead is corroded by solutions of $Pb(NO_3)_2$ whereby lead oxide and nitrite are formed [R 1].

CHAPTER VII

Construction of separation columns

The separation columns are made by filling pulverized glass, quartz or aluminium oxide in a tube with one end closed by a fritted glass disc. When the powder is packed as tightly as possible the tube is closed by fusing on a second disc above the powder. (The columns used in the **Li**Cl, **Cd**Cl_2, **Tl**Cl and **Ag**Cl runs were not made this way). The powder (except the $A1_2O_3$) is made either by pressing in a hydraulic press or by grinding in a mill. The latter process is much more rapid, but it gives impurities in the powder. The distribution of grain sizes is very different for the two methods of pulverization. The powder is sieved and the fractions are classified in the DIN system by the two sieves between which the powder is collected. The dimensions in mm for the fractions used in our experiments are given in table 16. For readers more used to measuring grain sizes in mesh, the following approximation can be used: (DIN) x 2.5=(mesh). The powder is cleaned carefully by boiling first with HCl (omitted for the pressed powder) to dissolve iron, and then with HNO_3. After being treated with

Table 16. Sieves used for fractioning our pulverized glass and quartz. German standard DIN 1171.

Sieve Nr DIN	Sieve opening mm
11	0.54
14	0.43
20	0.300
24	0.250
30	0.200
40	0.150
50	0.120
60	0.102

the acid, the powder is soaked with distilled water repeatedly, until the decanted water shows a neutral reaction. The reason for this careful treatment is that we can expect trouble in the runs both from organic impurities, which could react with the fused salt, and from grains of metal, which might take over part of the current transport giving anode and cathode deposition reactions in either end of the metal grain. The fritted discs are made by sintering Supremax or Pyrex powder of the DIN 14—20 fraction in an electric oven.

In the choice of powder for a separation column a few factors are to be considered. The powder must, of course, stand the temperature in the column without sintering or melting. For this reason Pyrex has been used only in the $PbBr_2$ experiment. The chemical resistance of the powder is, of course, of great importance. Quartz was used in the $LiNO_3$ runs because it seemed to be still more resistant to the melt than Supremax (cf. p. 32). After each run the powder used is studied under a microscope to see if it has been attacked by the melt. This is usually not the case, but sometimes the surface of the grains bears trace of the contact with the melt. (See the papers on the different experiments). The thermal conductivity of the powder is of some importance, as the maximal current density allowed in the column depends on the axial and radial temperature distribution. For this reason Al_2O_3 is superior to glass or quartz. It might also be mentioned that from the glass-blower's practical point of view it is easier to fuse on the second disc, if the powder has the same thermal expansion as the glass tube and disc. The packing material and the grain sizes used in the different runs are given in table 1. We shall discuss their importance for the efficiency of the column in chapter XI.

For calculating the current density we need to know the free cross section of our columns. This is determined in connection with the chemical analysis. The length and weight of each sample is measured before the salt is dissolved. If it has not been necessary to crush the sample to soak out the salt, we can weigh the remaining packing separate from the tube and measure the diameter of the tube. If the density of the packing material is known, the free space in the column can readily be calculated. When working with salts easy to dissolve, we have usually made this determination for all the samples, getting most of the results to agree within a couple of per cent. With slow-dissolved salts we have sometimes crushed all but one or two of the samples. The free spaces thus measured are given as mean values for each run in table 1. Neglecting the extreme value for Al_2O_3, we find that they all fall between 41 and 47 per cent, independent of material and grain size. It is of interest to compare this result with the free space in the packings used by Brewer and Madorsky [B 2] in their enrichments of potassium isotopes. For glass beads the free space was 38 per cent, independent of the size of the beads used. It is not surprising that our value is higher, as our grains are very rough and of all odd geometrical forms, while their beads probably were about spherical. For perfect spheres of uniform size the free space is 26 per cent for close packing and 48 per cent for loose packing, where each sphere is alternatively in contact with 12 or 6 others. Brewer and Madorsky found slightly lower free spaces for sand (34—36 %) and for silicon carbide (35 %) than for the glass beads.

The free space discussed above is a pure geometrical quantity and not the same as the electrical free space, as the pores in the column are not straight but have an effective length greater than the geometrical length of the column. Brewer and Madorsky measured the electrical free space by comparing the conductivities of packed and unpacked columns. For their different packing materials they found the electrical free space to be some 75 to 80 per cent of the geometrical free space. We have not made any such direct measurements, but we can compare the currents and voltages measured during our runs with the resistances that could be expected in our columns from the geometrical free space. Such a comparison must be very approximate, as we do not know the exact temperature in the columns during the runs, and the conductivity of a melt increases rapidly with the temperature [B 4]. With this reservation we find that the most reliable of our ratios between the two types of free space lie close to the results of Brewer and Madorsky. (Some of our ratios seem to be much lower than expected from their results, but again, the values are very uncertain).

CHAPTER VIII

Permeability of separation columns

In our trials with $LiNO_3$ we noticed that there was a pronounced tendency for the salt level to rise in the cathode compartment if we had DIN 50—60 powder in the column [L 2]. In these experiments we can talk of the $LiNO_3$ flowing from the cathode compartment where it is produced by the reaction $Li+NO_2+\frac{1}{2}O_2=LiNO_3$. We considered it of interest to know to what extent the observed difference in level merely depended on the viscosity of the melt, or in other words on the resistance to flow in the column. The direct way to measure this effect should be to fill the cell with fused $LiNO_3$ to unequal heights in the two compartments and take the time for a measured volume to flow through the column at a certain temperature. If, however, we want to compare the permeabilities of cells built for work with different salts, it is more convenient to use a common liquid such as water when measuring on all cells. It is to be expected that the data obtained for water and a fused salt differ only in the viscosity, because the surface tension of water (73 dynes/cm at 18°C) is not much lower than for most melts, e.g. 113 dynes/cm at 339°C for KNO_3 [F 2].

We consider the column as equivalent to a bundle of N circular capillary tubes of radius r cm and of an effective length l cm. By means of a cathetometer and a stop-clock we measured the time, t sec., for the water to rise Δh cm in a tube of diameter D cm, if the water stands h cm higher on the other side of the diaphragm. We measured the temperature of the water to get the viscosity, η poise. Poiseuille's law gives us

$$N \cdot \frac{r^4}{l} = \frac{D^2 \cdot \Delta h \cdot 2\eta}{t \cdot 981 \cdot h} \tag{26}$$

where the left membrum is to be considered as a constant, typical for the cell. The experimental error in the measurements themselves adds up to maximally 10—20 per cent; mainly from errors in D and η. (As for the first error, the tubes were not of a quite circular cross-section or constant diameter. We measured the tube when making the cell, but we did not want to cut the cell into pieces after measuring Δh to get the diameter at this special height. The value for η depends on the temperature in the column, while we measured the temperature in the water above the column. Δh, h and t were all known well within 1 per cent). We, however, only considered the values to be correct within a factor of 2, because there is always a certain risk that some of the "capillary tubes" are blocked by tiny gas bubbles. This is evident from the measurements on the cells A—D, where the cells were left with water in them for 13 months between the two measurements; see table 17, where the value on the left is the early one. For cell D we made 6 measurements with h between 30 and 6.7 cm. 4 of the values agreed within 1 % while the extreme value was 15 % off, which was not unexpected, as the water-level was then close to a joint, the tube thus probably being slightly narrower in this region. These four cells were made specially for studying the resistivity to flow. They were packed with Pyrex. We also measured on 11 other cells packed with quartz, see table 18. When comparing different cells we must regard both the length (L cm) and the diameter of the column. As all of the cells had diameters near to 4 mm, we have confined ourselves to multiplying $N \cdot r^4/l$ by L.

There is, of course, a spread in the values, owing partly to errors of measurement, partly to differences in cross-sections of the columns and in other parameters. We see, however, that the values fall into distinct groups according to grain size. When comparing the tables 17 and 18, it must be remembered that the quartz filled columns were slightly wider than those filled with Pyrex.

To calculate the effective radius of a capillary we need to know N and l. In order to estimate N, the grains in a weighed quantity of the fraction DIN 24—30 were counted under a microscope giving a mean volume of $1.02 \cdot 10^{-5}$ cm^3, in good agreement with what is to be expected for the sieves in question, if the grains are regarded to be shaped like prisms, pyramides, double-pyramides, etc. Nearly spherical grains are rare, as is evident from studies under the microscope. If the free space is 45 %, we find that for this fraction we have something like 54000 grains per cm^2. We can choose the number of capillaries per cm^3 to be $(54000)^{2/3} = 1400$. The number of capillaries for different grain sizes can be considered to be proportional to the "DIN" numbers. We get our N-values for the actual columns by multiplying by their (total) cross-sections. Assuming all our capillaries to be straight, we have

Table 17. Permeability of four cells with Pyrex packings. For explanation see text. The diameter of the columns was 3.8—3.9 mm. The values in the 3 right columns are based on the "March 1956" measurements.

Cell	Grain size DIN	$N \cdot \frac{r^4}{l} \cdot L$ 10^{-8} cm^4		$2r$ 10^{-3} cm	d 10^{-2} cm	$\frac{2r}{d}$
		Febr. 1955	March 1956			
A	50—60	0.85	1.1	3.9	1.1	0.36
B	30—40	3.7	4.1	6.8	1.75	0.36
C	20—24	6.7	13	11	2.75	0.41
D	11—14	44	42	20	4.9	0.41

Table 18. Permeability of cells packed with quartz. The diameters of the columns varied between 4.0 and 4.2 mm.

Grain size DIN	Number of cells	$N \cdot \frac{r^4}{l} \cdot L$ 10^{-8} cm^4
24—30	5	8.6 7.1 11.7 8.5 6.5
30—40	3	4.9 4.4 4.8
50—60	3	2.3 2.1 1.7

$l=L$. Now we can estimate diameters, $2\ r$, of the "effective capillary tubes". The values are given in table 17 for the Pyrex cells. This diameter can be compared with a grain-size parameter, d, chosen as the mean of the openings of the two sieves between which the fraction was collected. The ratio $2\ r/d$ is given in the table. It is close to 40 per cent and perhaps slightly higher for columns with coarse grains than for fine-grain ones. We can compare this result with the ratio 0.33 found by Brewer and Madorsky [B 2] between the diameters of the straight capillary and of the glass beads. Our ratio is somewhat higher, perhaps because there is more free space in our columns.

Another method to study the permeability is to measure the time for a certain volume of air to pass through the packing [K 16].

It might be of some interest to estimate the total surface of the grains in a column. The reasonable assumption that the distribution of the shapes of the grains is the same for all fractions, gives that the surface is about twice as large for DIN 50—60 as for DIN 24—30, as the ratio surface-volume is inverse proportional to a parameter of length, such as our *d* used above. For the latter fraction we have found it to hold about 54000 grains/cm^3. In an ordinary column (20 cm long, diam. 4 mm) there should be about $1.4 \cdot 10^5$ grains. If we assume the average surface of one grain to be $2.5 \cdot 10^{-3}$ cm^2, we get a total surface of $3.5 \cdot 10^2$ cm^2. If we took the ruggedness of the grains in account, we should find higher values for the surface. The value we have found is, however, sufficient to give an idea of the order of magnitude.

In some early trials with $\mathbf{ZnCl_2}$ we worked without a stabilized oven temperature. We then found that the position of the $ZnCl_2/PbCl_2$ boundary was sensitive to changes in oven temperature. This might have been due to changes in the viscosity of the salts.

CHAPTER IX

Electro-osmosis in separation columns

In the experiments with a boundary in the column we have usually noticed that this boundary is displaced somewhat towards the cathode from the position corresponding to a hydrostatic equilibrium [K 16]. When working with only one salt, there is an analogous tendency for the melt to rise in the cathode compartment, specially pronounced when using fine-grain columns and high current densities. These observations can to a certain extent be explained by a Poiseuille-flow of the melt through the column, as discussed in the preceding chapter, but it seems very likely that electro-osmosis is of importance, perhaps often the dominating factor. Before recapitulating some observations, it should be emphasized that all estimations of the contribution from the Poiseuille-flow are very uncertain, as the viscosity of molten salts varies so strongly with the temperature (e.g. for $LiNO_3$ 0.05 poise at 300°C and 0.035 at 360°C [D 2]), and the generated heat gives both axial and radial temperature gradients in the separation columns. Also the contribution from electro-osmosis is temperature dependent, as will be discussed below.

In a number of $LiNO_3$ trials we had DIN 50—60 grains in the column. The volume of salt in the anode compartment was to be kept small during the whole run. Hence, the experiment was very sensitive to changes in the level of the melt. The usual observation was that after a few hours the level had sunk so much, that the contact between anode and melt was broken. If we sucked with a water jet pump, we could of course get the melt up to the original height, but it started to sink again as soon as the current was switched on. The only thing to do was to increase the pressure on the cathode side, either by filling more $LiNO_3$ in the cathode compartment or by keeping different gas pressure in the two compartments, cf. [L 2]. It seemed as if the equilibrium was "meta-stable", as the level could stay fairly stable for hours before sinking. After the pressure was increased, the level was again stable about in the old position for a while before it started to sink again. (It could happen too, that the level suddenly started to rise in the anode compartment, but this was rare). This effect often determined for how long time we could keep a run going. In one trial we stopped after 29 hours, when we had a pressure difference of about 23 g/cm^2, while in the run **LiNO$_3$** C we had 32 g/cm^2 after 48 hours. In the latter run we expected the contribution from the Poiseuille-flow to be something like 9 g/cm^2. It is worth mentioning that there was no appreciable increase in (electrical) resistance coinciding with the displacement of the salt, as could be expected if the effect was caused by a large part of the column being blocked by gas inclusions.

In other **LiNO$_3$** trials, among them the runs A, B and D [L 2], we had grains of the size DIN 24—30. With current densities of the order of 1 A/cm^2 the levels were perfectly stable and equally high in both compartments. With higher current densities (**LiNO$_3$** D 4.5 A/cm^2) it could happen that the level sunk at the anode, but it was brought back by a gentle increase in pressure on the cathode side. This excess of pressure was removed as soon as the level was correct. Thus in this run we had stable conditions without even the pressure difference of about 3.5 g/cm^2 expected from the Poiseuille-flow measurements with water.

Another experiment where we followed the levels at the electrodes carefully was in the runs with LiBr and LiCl in the column, see p. 34. We then had DIN 24—30 Supremax powder in the column. The current densities were about 6 A/cm^2, and the temperature was about 610°C. There was a pronounced tendency for the level to rise at the cathode. In the 24-hour run we measured a pressure difference of 13.5 g/cm^2 and in the 8-hour run 5 g/cm^2. We have not made any estimations of the contribution from Poiseuille-flow here because the composition of the melt changed gradually in the column.

In an earlier paper [L 2] we considered the transport of the melt to the cathode compartment to depend additively on Poiseuille-flow, electro-osmosis and self-transport ("Selbstüberführung"). Representing the column by a bundle of N capillaries we get the increase in volume per unit time

$$W = N\pi r^2\left(-\frac{r^2}{8\eta}\cdot\frac{\Delta p}{l}+\alpha E+\beta E\right) \tag{27}$$

The notation is the same as in the preceding chapter, except for the difference in pressure: $\Delta p = 981\cdot h$. E is the electrical field-strength in the melt. a and β are coefficients of electro-osmosis and self-transport. The former is not known for molten salts. It is likely that this coefficient is temperature dependent, cf. [F 2 a]. β is given by the relation [L 2].

$$\beta = U^{+}\varkappa/cFz \tag{28}$$

where U^{+}=transport number, cf. p. 83, $\varkappa$=conductivity of the melt, F=Faraday's constant, z=valency and c=moles per cm^3. (In our earlier paper [L 2] we assumed that $U^{+}=1$. Duke and Laity [D 3] have found $U^{+}=0.85$ for LiNO$_3$).

In equilibrium we have $W=0$, i.e.

$$\Delta p = \frac{8\eta lE}{r^2}(a+\beta) = \frac{8\eta lI}{\pi N r^4}\left(\frac{a}{\varkappa}+\frac{U^{+}}{cFz}\right) \tag{29}$$

where I is the current. $N\cdot r^4$ is the cell-constant which can be determined according to the previous chapter. $\Delta\ p$ should thus be inverse proportional to r^2 for the same temperature, length of column and field-strength. The introductory review of the observed level-differences is not in good agreement with the equation (29), although it must be remembered that several parameters are temperature dependent and that the values for r, the effective radius of the capillaries, are very uncertain. The discrepancies might depend on a change in the "cell-constant" $N\cdot r^4$ (cf. [L 2]), but it is also possible that Poiseuille's law does not hold exactly for our columns. The validity of this law is assumed in all treatments of electro-osmosis and related phenomena [F 2 b]. Some deviations have been observed in certain cases, but it is doubtful whether they can be extended to cover our problem.

CHAPTER X

Temperature distribution in the columns

During a run heat is generated in the column over which we usually have more than 90 per cent of the total voltage. When running with a stable current an equilibrium is soon reached, where we have both axial and radial temperature gradients in the column, giving the corresponding distributions of conductivity and viscosity. The axial temperature gradients are less pronounced when the column is surrounded by a melt, such as in most of the "cation" runs, see fig. 2, p. 15, than when the column is directly surrounded by the air in the oven, such as in all the "anion" runs (fig. 1, p. 10). The reason is, of course, the well known fact that the heat-transfer is much more effective from a solid (the outer wall of the column) to a liquid than to a gas. The temperature drop over the glass walls of the column can be estimated [S 6] to be of the order of 10 to 30°C for our runs. The radial temperature distribution in a normal column probably gives differences of the same order of magnitude between the central axis and the walls.

It is sometimes possible to estimate an average temperature for the column from the decrease in cell-resistance usually observed during the first few minutes after the current has been switched on. This change is, however, often so rapid, that the readings are very uncertain for the moment of the start. Data from the $ZnCl_2$ and $PbBr_2$ runs indicate that the temperature was of the order of 100°C higher in the column than in the rest of the melt. It is very often observed that the column glows slightly in the dark, showing that the column is at a higher temperature than the rest of the cell. This glow is usually fairly uniform except for a couple of cm at both ends. In trials where local overheating occurs frequently, such as when working with $LiNO_3$/$RbNO_3$ boundaries, the spots are located by their glow.

When we have a moving boundary between two salts with a big difference in conductivity, such as $PbCl_2$ and $ZnCl_2$, the temperature in the column can be estimated by measuring the change in voltage connected with a certain displacement in the column [K 16].

For all runs except $\mathbf{Zn}Cl_2$ and $Zn\mathbf{Cl}_2$ the temperatures given in table 1 are the oven temperatures measured with a thermocouple, cf. chapter V. The actual temperatures in the columns are 10 to 100° higher, depending on current density, conductivity of the salts and construction of the column.

CHAPTER XI

On the efficiency of the separation columns

In this chapter we shall omit discussing the properties of other columns than those built as described in chapter VII.

In chapter III we reviewed the theory behind our experiments, and derived a few equations by means of which the efficiency of our separation columns can be studied. We found that a certain desired enrichment will be achieved quicker, the smaller h, the length of a theoretical unit, is. Westhaver [W 2] has made a theoretical study of the factors determining h. He considered in particular the enrichment of ^{39}K by countercurrent electromigration in aqueous solutions, but his conclusions have a more general validity, and we shall thus summarize a few of his results that might be of value for us when discussing our experiments.

Under certain ideal conditions he finds h-values as small as 0.002 cm, but he shows that even fairly small disturbances in the columns, such as channels, give values of h of the order of 1 cm or higher. Channelling both along the walls and in the core is very disastrous, even if the diameter of a single continuous channel is only, say, five times the mean pore size. h increases if the packing contains gas bubbles.

Westhaver states that if thermal convections are to be reduced to negligible velocity, the mean pore radius should be 0.002 cm or less. None of our columns quite fulfil this condition, but we have not noticed any pronounced influence of grain size.

Finally we shall give a relation, that follows from Westhaver's paper, between the coefficient of pure diffusion, D, and the effective coefficient D', covering also the convection remixing. See also [K 22].

$$D' = D + 0.02 \frac{w^2 r^2}{D} \qquad (30)$$

This relation is valid if the countercurrent is an ordinary flow following Poiseuille's law. (Chapter VIII). If we choose $w = 2 \cdot 10^{-3}$ cm/

5 — *Lundén.*

sec, $r=1\cdot10^{-2}$ cm and $D=2\cdot10^{-5}$ cm²/sec. we find that D' is 2 per cent higher than D. Such minor differences can be neglected when compared with the experimental error in the values our runs give for D'.

We shall now see what information the experimental data give on the efficiency of the columns used in the runs which have been analysed. For this purpose we need to know the distribution of the isotopes in the column during the run. There are, however, many complications, which make a straight-forward comparison between the analyses difficult. Several experiments have thus been made with elements consisting of more than two isotopes (K, Zn, Cd, Pb) and the theory has not been worked out for the general polyisotopic mixture. (Chapter III). Of course, when all but two of the isotopes are so rare that their presence can be neglected, the problem is reduced to the binary case. This holds for K but not for Zn, Cd and Pb.

Our experimental material consists only of the abundances, amount of salt and lengths of several samples. We must remember that these samples have been prepared by cutting the cold column into pieces, which means that they do not necessarily represent the actual state in this part of the column at the end of the run. Volume contraction when the salt solidifies and while the apparatus cools down to room temperature can sometimes give considerable dislocations in the column. This was very obvious in the runs with an end volume (**$LiNO_3$**, **KNO_3**), when the level in the anode compartment sunk markedly. Looking at e.g. the run **$LiNO_3$** D, we find nearly the same abundances for the samples 0, 1, 2, and 3 reaching some 6 or 7 cm down in the column. The most probable explanation for such a distribution is that most of the salt in these samples comes from the end volume.

The displacement during the cooling-down can be expected to be larger the higher the operating temperature was above the melting point of the salts. If there is a big difference in the melting point for different components, there is always a risk that the low-melting substance fills out pores in the already solid partner. We noticed this very clearly in a **$PbCl_2$** trial, where we had the boundary between metal and salt a few cm up in the column. At a temperature of perhaps 350°C the black molten lead suddenly shot upwards through the part of the column filled with solidified $PbCl_2$.

When shutting down we have often made effort to cool certain parts of the cell first, e.g. by blowing air at one critical spot, in order to prevent a salt exchange between the column and the rest of the cell.

By applying equation (4) to the experimental data we get the f_n

values for the different samples (tables 2—13), and if we plot f_n against x (cm or mg salt) we get a step-like curve from which we want to deduce the real distribution curve to get f_{max} (for $x=0$) and x_{max} (for $f=0$), see equations (15) and (17). The x_{max} values are determined graphically and given in table 1. The error in x_{max} can in most cases be estimated to be about one cm. For **$LiNO_3$** C and D, however, the values are much more uncertain. The first samples (C:0—3 and D:0—3) all have nearly the same composition and are thus considered as the "end volume" (cf. above). The lengths x_{max} are thus here measured about from the boundary between the samples numbered 3 and 4. These x_{max} values are thus more to be considered as a lower limit for the length of the enrichment; to get the upper limit we should add about 6 cm to the given values. It must be emphasized that we can expect higher x_{max} values for **$LiNO_3$** C and D than for most other experiments because of the occasional displacements of the salt in the column during these runs (cf. [L 2] and chapter IX).

When two runs are to be compared it is better to use the time independent quantity D'instead of x_{max} (cf. eq. 17).

Estimating f_{max} is a more arbitrary procedure than for x_{max}. A plot of f versus x gives a surface between the step-curve and the abscissa which is to be put equal to the surface under the real f (x) -curve. If we start with KLEMM's approximation [K 20, K 22] with a straight line through f_{max} and x_{max}, we find for nearly all our runs f_{max} values lower than the actual f_1 values, which does not seem plausible. We can next try KLEMM's theoretical curve for the case where one isotope is rare; eq. (12). If we let this curve leave its asymptote,the abscissa, at the end of the last enriched sample we get

$$f_{max}=\frac{4}{\sqrt{\pi}}\,\frac{\Sigma f_n N_n}{\Sigma N_n} \tag{31}$$

The values obtained are often lower than f_1, although they fit very well for some runs. Of course higher values are obtained if we let the same curve start at the x_{max}-value determined graphically.

We have also tried the extreme approximation of a parabola fitted to f_{max} and the end of the last sample (vertex in one of these two points). Then we get

$$f_{max}=3\,\frac{\Sigma f_n N_n}{\Sigma N_n} \tag{32}$$

which gives values fitting for some of the runs!

The calculated value that has given the best value for most runs represents a straight line through the middle of the two first samples, i.e.

$$f_{max} = f_1 + \frac{N_1}{N_1+N_2}(f_1 - f_2) \tag{33}$$

We have compared the f_{max}-values calculated in the different ways with plausible values extrapolated from graphical plots. Afterwards we have made a somewhat arbitrary choice of a "best" value. The results are given in table 1. Perhaps it is fair to consider these values to be correct within some 10 to 20 per cent.

Finally we have divided x_{max} by f_{max} to get h (eq. 5, p. 26) the length of one theoretical unit, a quantity that can be expected to be of value for a comparison of different columns.

Let us look at the values for D' and h and see what general conclusions we can draw in spite of the big experimental errors in our values. These errors are much larger than the deviations we should expect between the different ideal values. (h being dependent of time and of initial isotopic composition; D for each salt being temperature dependent).

In this comparison we shall neglect the values for **Li**Br, as the presence of both LiBr and $PbBr_2$ in each sample from this run indicates that the boundary was moving in the column, thus giving a certain mixing. Such an assumption is supported by the fluctuations in voltage during the run and by the fact that there was a crack in the cathode compartment through which LiBr leaked out during the last hours of the run. There is no reason to believe that enriched salt was lost from the column due to this leak, as the three upper samples (6, 7 and 8, see table 13) had the normal $^7Li/^6Li$ ratio. The fact that the h and D' values are doubtful, does not reduce the weight of the mass effect in a comparison with other μ-values. (Chapter XV).

The temperature during the run does not seem to have any marked influence on the performance of the columns, cf. e.g. **Pb**Cl_2 A and B or Pb**Cl**$_2$ and Pb**Br**$_2$, both pairs differing 100°C or more in temperature but with nearly the same values for h and D'. Nor does the initial abundance of the isotopes, cf. Pb**Cl**$_2$ and Pb**Br**$_2$, or the number of isotopes, cf. **Zn**Cl_2 and **Cu**Cl B or **Zn**Br_2 and **Cu**Cl A, show up in h, which is in agreement with our argument on p. 29, that the runs have not been long enough to show a large effect of the initial composition in the separation factors (Q).

Turning our interest to the effect of the packings, we find that the grain size does not have any strong influence (compare e.g. **Li**NO_3 C and D), but when we compare the packing materials we find a marked difference, as all the columns packed with Supremax or Pyrex glass have theoretical plate heights (*h*) not exceeding 0.05 cm, while this height is at least 0.09 cm for the quartz-filled columns. This division in two groups of *h*-values according to packing material is so marked, that there is reason to believe it to be significant. (This is the only marked difference between pairs such as $ZnCl_2-ZnBr_2$ and the two CuCl runs). This result is somewhat surprising, as the packing material is not expected to take part in any reaction causing the isotope effect observed in the experiments. There is no difference in free space for the two types of packings. The only divergence is that we have the quartz packings in tubes of Supremax glass, thus having a different thermal expansion for wall and packing in this case. The tubes are packed at room temperature (and the free space is also measured at room temperature after the run) and when heating several hundred degrees we get a tendency for wall channelling for the quartz, but not for the Supremax (or Pyrex) packings. Such a channelling has disastrous effects on the theoretical plate height, according to WESTHAVER [W 2], see p. 65. An estimation of the plausibility of channelling can be made by calculating the distance between wall and quartz packing, if the latter is assumed to form a rigid structure independent of the existence of the wall; this assumption is, of course, not at all valid, but it represents the worst possible case of symmetrical channelling. At room temperature the wall and the "packing lattice" have the same radius, say 2 mm. After heating by 500°C the distance between wall and lattice will be 0.003 mm. (Thermal expansion coefficients taken as $33 \cdot 10^{-7}$ for the glass and $5.46 \cdot 10^{-7}$ for the quartz. [H 4]). This channel width is one order of magnitude less than the effective diameter of the capillaries for our most fine-grained packings, see table 17. Of course in practice the outer grains follow the expansion of the wall, and we do not get anything like a symmetrical wall channel, but still there might be some reason to believe that the difference in thermal expansion can have caused the observed higher *h*-values for the quartz packings. If the observed difference between quartz and glass packings is caused by wall channelling, we would expect the length of the theoretical unit to increase with temperature for the quartz packings, but no such temperature effect has been observed. We have only one run (TlCl) with an Al_2O_3 packing in our series. The theoretical plate height is here the same as for Supremax ($PbCl_2$) and Pyrex ($PbBr_2$) packings. A comparison of thermal expansions (Volume expansion coefficient

$75 \cdot 10^{-7}$ for Al_2O_3 between 20 and 600°C [L 11 a]) shows that wall channelling is negligible for Al_2O_3 packings.

There is a big spread in the effective coefficients of diffusion, D'. We always expect them to be higher than the coefficients of pure self-diffusion, D. The latter are only known for a few melts. Thus for $PbCl_2$ HEVESY [H 5] found $D^+ = 1.7$ cm²/day at 575°C. For TlCl BERNE and KLEMM [B 7] found $D^+ = 3.25$ cm²/day at 492°C and HERR and KLEMM [H 6] found $D^- = 4.57$ cm²/day at 550°C. We see from table 1 that some of the D' values are close to these directly measured coefficients, while other values in table 1 are higher, indicating that there were disturbances in the column during the run (or that the salt in the column mixed during the cooling down).

CHAPTER XII

Disturbances caused by gas bubbles and local overheating in the columns

If gas is trapped in the column during the filling of the melts into the cell, this can cause a local overheating of part of the column, because the whole current is then conducted through only a few pores in the packing. The boiling point of the melt can be reached in this part of the packing, giving still more gas and a more effective blocking. Of course the volume of the occluded gas increases with temperature, which also makes the blocking worse. If the temperature gets high enough, the packing material starts to melt, which can give a permanent blocking of many pores. The walls of the column can also be deformed by the heat. The most dangerous effect of the overheating is that the gas may block the column completely, giving the full voltage of the DC-supply across a very short distance. This causes sparks which the column cannot stand for a long time without being wrecked, e.g. by a puncture in the walls through which the melt can leak out.

The risk for the most disastrous results of overheating can be reduced by introducing a resistance in parallel with the cell, thus reducing the rise in voltage over the blocked part of the column. See chapter V and fig. 5.

The blocking by gas often occurs in or just beneath the fritted glass discs, because gas bubbles rising through the column often cannot pass through the disc. The temperature in a vertical column is highest a few cm under the top, where we thus can expect gas to evolve first, if the cause is thermal decomposition or boiling. Another critical spot is at the boundary between two salts in the column.

Evolution of gas has caused special trouble in trials with a boundary between two nitrates. If we compare $LiNO_3$ and $RbNO_3$ at e.g. 370°C, we find that the former salt has a nearly three times better conductivity (1.43 Ω^{-1} cm^{-1} con 0.55 Ω^{-1} cm^{-1}) and a somewhat lower density

(1.7 con 2.4 g/cm^2). Hence, the conditions for having a sharp boundary between the two salts should be fulfilled in a system $-\ \mathrm{LiNO_3/RbNO_3}+$. Nevertheless in all our trials with this system the chemical analysis has shown that the two salts had mixed throughout the whole cell after a few days run. The percentage of $\mathrm{RbNO_3}$ in the samples from 4 runs is given in table 19. Sample 1 comes from the cathode compartment and the sample with the highest number from the anode compartment. The total amount of salt was determined by weighing the glass before and after the salt was dissolved. The rubidium was determined as $\mathrm{RbClO_4}$. In most samples the lithium was determined both indirectly, as the difference between the total amount and the $\mathrm{RbNO_3}$, and directly by weighing $\mathrm{LiClO_4}$ after the separation from the $\mathrm{RbClO_4}$. The latter salt is insoluble in 99.5 % alcohol. All the cells were packed with quartz of the DIN 24—30 grain size.

The first trials at 1 A/cm^2 worked fairly smoothly. It was supposed that the lack of a sharp boundary in these runs was due to the current density being too low. For this reason higher current densities were tried in several runs. They were all disturbed by gas occasionally

Table 19. Analysis of 3 trials with the system — $\mathrm{LiNO_3/RbNO_3}$ — (Figures in brackets are estimated).

Run	A	B	C	D
Time hours	169	193.5	116.4	106.8
Current density, A/cm^2	1	1	3.6	3.5
Sample	$\mathrm{RbNO_3}$ weight per cent			
1	28.4	35.4	(14)	(1)
2	65.0	57.7	14.2	2.0
3	72.7	57.2	50.9	25.0
4	79.1	78.5	65.9	70.3
5	82.2	80.9	79.1	73.8
6	93.3	85.3	83.5	73.4
7	98.5	89.7	83.6	74.1
8			(83.7)	79.3
9			83.9	83.6
10			84.2	87.3
11			(84)	

evolving from the column, which was bent in the same way as shown in fig. 4. The resistance in the melt fluctuated with the evolution of gas. Different parts of the columns showed a tendency to glow because of overheating.

It was thus definitely worse to run a trial with two nitrates than with only one melt (**$LiNO_3$, KNO_3**). The reason for the trouble is obviously the fact that thermal dissociation sets in at a lower temperature for a binary mixture of two nitrates than for the pure salts. CENTNERSZWER [C 4] has studied the systems $LiNO_3-KNO_3$ and $LiNO_3-CsNO_3$, which both have a minimum in dissociation temperature at about 430°C, 30° lower than for pure $LiNO_3$.

Molten $AgNO_3$ has a good conductivity, about the same as $LiNO_3$. The melting point is 212°C, and thermal dissociation sets in at 291°C (755 mm Hg) [C 3]. Thus it should be possible to enrich silver isotopes in molten $AgNO_3$, although much care must be taken to avoid local overheating in the column.

CHAPTER XIII

The mass analysis

The mass analysis has been performed in several laboratories. The results are given in the tables 2—13. The errors claimed are usually standard deviations (KNO_3, LiBr) or at the 95 % confidence level ($LiNO_3$, $PrBr_2$). For elements with more than two isotopes, the primary values have been adjusted according to a method described in the $ZnBr_2$ paper [K 17]. The principle is that the precision of each measurement is roughly proportional to the abundance of the isotope.

The analyses have been done either with a mass spectrometer ($ZnCl_2$, $ZnBr_2$, $PbCl_2$, KNO_3, $PbBr_2$, LiBr) or by neutron activation (CuCl, $LiNO_3$, $PbCl_2$, $PbBr_2$, TlCl, $ZnCl_2$). All the latter were pure relative measurements where both a normal sample and the unknown sample were irradiated under the same conditions. The abundances for the normal samples were taken from recent nuclear tables, except for $PbBr_2$ where the abundances were measured by mass spectrometer as well as by two activation methods. This experiment shows that the results of the different methods are in agreement with each other. The ^{80m}Br and ^{37}Cl activations ($PbCl_2$, TlCl, $ZnCl_2$) were done by irradiating with slow neutrons from an H.T. set; for techniques see [K 18] and [C 1]. The ^{82}Br activity was produced in a large graphite modulated pile (Harwell) while the ^{64}Cu was activated in a small heavy water modulated pile (Kjeller, Norway) [L 5]. A comparison of the precisions in these two measurements with pile activated samples shows the importance of having homogeneous neutron fluxes at the position of the samples. Large graphite modulated piles are superior to small heavy water ones for mass analysis purposes. The $LiNO_3$ activation was done by a method developed by Wänke and Monse [W 3]. The accuracy of this method has been checked by mass spectrometer measurements by Cameron [C 5].

Concerning the analysis with mass spectrometers, the normal values given for $ZnCl_2$ and $ZnBr_2$ are nuclear table values, in good agreement with the abundances measured for samples from the far end of the separation column, while the normal abundances for $PbCl_2$ A and B, LiBr and KNO_3 were measured on samples of the salt used in the actual run. (The slight deviations between the normal values of the two lead runs can be caused by the fact that $PbCl_2$ from two different firms was mixed in one of the runs while $PbCl_2$ from only one of these firms was used in the other run). The standard used in the mass spectrometer measurement on $PbBr_2$ came from another source than the salt used in the run; a careful investigation by CAMERON and LIPPERT [C 6] has, however, shown no significant difference in the isotopic composition of bromine in nature. For discussion of the errors in the measurements with the mass spectrometers see the individual papers [K 16, K 17, L 3, C 1, L 4, L 7].

CHAPTER XIV

The accuracy of the determined mass effects

Before drawing any conclusions from a comparison of the mass effects calculated from the experimental data of the individual runs, it is necessary to estimate how accurate the results obtained by means of equation (23) are.

$$\left(\frac{\Delta w}{w}\right)_{j,k} = \left(\frac{{}^{j}N}{{}^{j}N^{\circ}} - \frac{{}^{k}N}{{}^{k}N^{\circ}}\right)\frac{FN}{L} \tag{23a}$$

with

$$N = \sum_{i=l}^{n} N_i \tag{34}$$

$${}^{j}N = \sum_{i=1}^{n} N_i\,{}^{j}x_i;\ {}^{k}N = \sum_{i=1}^{n} N_i\,{}^{k}x_i \tag{35}$$

The notation is the same as in chapter III except for the indices. The superscript to the left indicates the isotope, the subscript to the right is the number of the sample and the superscript "o" to the right indicates initial conditions. ${}^{j}x_i$ is the abundance of the isotope j in the sample i. In the ordinary way we can obtain the total relative error by adding the relative errors in the three factors $({}^{j}N/{}^{j}N^{\circ} - {}^{k}N/{}^{k}N^{\circ})$, N and L. The two latter errors are easier to estimate than the first one.

The error in N is determined by the accuracy of the chemical analysis of the samples; eq. (34). This of course depends on the analytical method used, for which a brief description is given in the special publications. Very often the amount of one salt in a sample has been determined by two independent methods, e.g. gravimetrically (weighing AgCl, $PbSO_4$, etc.) and by weighing the sample both before and after the salt was dissolved. For examples of analytical procedure see chapter II. The accuracy is often much better than one per cent, but sometimes the errors in single samples have been considerably higher for special reasons. In runs with end volumes there is always the risk that some salt has been lost by evaporation, cf. chapter XVI.

On one occasion there was a certain risk that all the salt had not been recovered when the sample was soaked out. This was in the run **$LiNO_3$** D, when the platinum anode was fused into a holder of lead glass, which did not at all stand the contact with condensed drops of $LiNO_3$. The remains of this holder were boiled with water to recover all the $LiNO_3$ for the sample D:O, but it is possible that some of the lithium had replaced sodium in the glass, see p. 32 and [S 1, S 2, S 3, C 2]. For non-hygroscopic salts the results of the differential weighing have usually been considered as the most accurate determination.

The error in L comes from two sources. First there is the instrument error. When copper coulometers were used, the measured value must be considered as very accurate; for the other experiments the error is of the order of one per cent. (Cf. chapter V). A much larger source of error occurs in the runs where all the enriched samples contain more than one salt. The problem then arises how much of the current has been transported by each salt. This question is complicated by the fact that the conductivity of a salt mixture is not an additive quantity, cf. [L 5]. Lacking a better method we always estimated the effective quantity of electricity transported by each component as being proportional to the concentration and conductivity of the different salts. The corrected amounts of current might have errors of several per cent. Such corrections have been made for the following runs: **$CdCl_2$** [K 14], **AgCl** [F 1] and **CuCl** [L 5].

There now remains the error in the expression in brackets. Each term is a sum of products, see eq. (35). Thus the total error depends on the accuracy of both the mass and the chemical analyses. The latter can usually be neglected because the individual N_i occur in both nominator and denominator, their errors thus tending to vanish in the quotients. Besides, the result of the chemical analysis is often very accurate, see above. It is thus nearly always sufficient to consider the error in the mass analysis, the methods of which have been discussed briefly in chapter XIII. (The errors quoted in the tables 2—13 are not always calculated on the same confidence level).

Let us first assume that we have only two isotopes $j=a$ and $k=b$. Thus

$$^{a}x_i+{}^{b}x_i=1;\quad {}^{a}N_i+{}^{b}N_i=N_i \tag{36}$$

The error

$$\Delta\,{}^{a}x_i=-\Delta\,{}^{b}x_i=\Delta x_i;\ \Delta\,{}^{a}N_i=-\Delta\,{}^{b}N_i=N_i\,\Delta x_i \tag{37}$$

Using the ordinary principles of error estimation, we introduce

$$\Delta=\Delta\,{}^aN=N\overline{\Delta x}$$

where

$$\overline{\Delta x}=\sqrt{\frac{\Sigma(\Delta x_i)^2}{n-1}} \tag{38}$$

is the root-mean-square error. We have here made the assumption quoted as nr 2 below. We shall first treat the case where the error in x° can be neglected: $\Delta x^\circ \ll \Delta x_i$. The total error in the expression in brackets is

$$\left(\frac{{}^aN\pm\Delta}{{}^aN^\circ}-\frac{{}^bN\mp\Delta}{{}^bN^\circ}\right)-\left(\frac{{}^aN}{{}^aN^\circ}-\frac{{}^bN}{{}^bN^\circ}\right)=\frac{\Delta}{{}^aN^\circ}+\frac{\Delta}{{}^bN^\circ}=\frac{\overline{\Delta x}\cdot N^2}{{}^aN^\circ\cdot{}^bN^\circ}=\frac{\overline{\Delta x}}{{}^ax^\circ\;{}^bx^\circ} \tag{39}$$

This simple relation gives a rapid estimation of the error in $\Delta w/w$, provided that certain conditions are fulfilled:

1. There are only two isotopes, a condition that is fulfilled by all runs but **$ZnCl_2$**, **$ZnBr_2$**, **$CdCl_2$** and **$PbCl_2$**, if we neglect the isotope ^{40}K in the **KNO_3** run.
2. All the samples are of about the same size; if there is a big spread in the individual N_i and Δx_i, the error given by (38) can be very inaccurate. In this case the N_i can be introduced as weights for the corresponding $(\Delta x_i)^2$ thus giving

   $$\overline{\Delta x}=\sqrt{\frac{\Sigma N_i(\Delta x_i)^2}{(n-1)\cdot N}} \tag{38a}$$

   For our purposes this refinement is hardly ever worth the effort.
3. The error in the normal abundance has been neglected. For all our mass analyses by neutron irradiation, our ${}^ax_i$ are based on the ${}^ax^\circ$ values given in tables on nuclear data. Thus equation (39) is valid for all the induced-activity measurements. For the mass spectrometer measurement on $PbBr_2$ (table 8) the error in the standard can be neglected beside the errors in the samples. For the other runs analysed with a mass spectrometer we can derive a relation in the same way as (39) was worked out, provided that ${}^aN\simeq{}^aN^\circ$, ${}^bN\simeq{}^bN^\circ$ and that the Δx_i and Δx° are small. We then get the total error

   $$\frac{\overline{\Delta x}+\Delta x^\circ}{{}^ax^\circ\cdot{}^bx^\circ} \tag{40}$$

   Δx° is assumed to be a positive quantity.

The absolute error given by (39) or (40) is independent of N, the total amount of salt in the enriched samples. This is, however, not the case with the relative error, because a given mass effect can either correspond to a high value for N/L and a low value for the expression in brackets, or the opposite. In the first case we have a weak abundance gradient in the column and a large relative error in the determined mass effect. The condition for accurate measurements of mass effects is thus to work with high current densities and other column conditions that give short theoretical units, our h of equation (5) and of chapter XI.

In nearly all runs the contributions from N and L to the error in the mass effect are much smaller than what comes from the error in the mass analysis. Thus this analysis must be done as carefully as possible, if the aim of the experiment is to determine the mass effect.

CHAPTER XV

Empirical and theoretical systematic relations between the determined mass effects

When calculating the mass effect (eq. 24) from the determined $\Delta w/w$ (eq. 23), we use the arithmetic mean $m=\frac{1}{2}(m_j+m_k)$. We should then also use the arithmetic mean $\frac{1}{2}(w_j+w_k)$, instead of the experimentally determined $\Delta w/w$, which is the physical mean $(x_jw_j+x_kw_k)/(x_j+x_k)$. (Subscripts as in chapter III; $x_j=$ abundance of isotope j). The difference between these two mean velocities is, however, less than 1 per cent even for **Li**Cl [K 13], and can thus be neglected in comparison with the experimental error in $\Delta w/w$.

The reason for using the arithmetic means for m and w is that e.g. for electromigration in diluted solutions the mass effect is calculated independent of the isotopic composition [K 40]. (The last figure in the mass effect given in table 20 for $\mathbf{K}NO_3$ is one unit higher than the previously published value, 0.036 [L 3], which was calculated with m=39.10, instead of the arithmetic mean 40).

The mass effects calculated for the different runs are given in table 20 for the cations (μ^+) and in table 21 for the anions (μ^-). In the first table the mass effects for $\mathbf{Li}NO_3$ and **Cu**Cl each are mean values from two runs, while the values for both $\mathbf{Pb}Cl_2$ runs are given because one (run A) concerns enriching the heavy and the other (B) the light isotopes. (The used systems of melts were thus different, see chapter II, and the mass analyses were done in different laboratories. Hence, the two runs can be considered as more independent of each other than the different $\mathbf{Li}NO_3$ or **Cu**Cl runs). The two **Li**Cl runs quoted were made about 8 years apart with different arrangements and using different methods of mass analysis, so that there is no reason to expect any systematical errors being common for these two runs. The mass effect for Ag**I** (table 21) is not determined experimentally but calculated from the fact that in the modification α-AgI the whole current is transported by the cations. Some of the mass effects are given with

Table 20. A comparison of how the measured mass effects for cations agree with two empirical formulae.

Salt	Mass effect $-\mu^+$	Confidence level %	Mass effect expected from equation		Reference
			(41)	(42)	
LiCl	0.135		0.137	0.202	K 13
LiCl	0.141		0.137	0.202	M 8
LiBr	0.26 ±0.03	95	0.144	0.226	L 7
LiNO_3	0.050±0.013	95			L 2
KNO_3	0.037±0.006	95			L 3
K^+ (aqueous)	0.077				B 2
CuCl	0.080		0.0809	0.0796	L 5
Cu^{++} (aqueous)	0.022				M 2
ZnCl_2	0.078		0.0799	0.0781	K 16
ZnBr_2	0.11		0.108	0.126	K 17
AgCl	0.064±0.006		0.0617	0.0540	F 1
α-**Ag**I (solid)	0.11		0.107	0.124	K 12
CdCl_2	0.067		0.0598	0.0523	K 14
TlCl	0.040		0.0401	0.0318	K 15
PbCl_2 A	0.024		0.0397	0.0314	L 4
PbCl_2 B	0.024		0.0397	0.0314	L 4

Table 21. The mass effects for chlorine and bromine.

Salt	Mass effect $-\mu^-$	Confidence level %	Ref.
Cl^- (aqueous)	0.037		M 1
Zn**Cl_2**	0.043±0.003	95	L 6
Tl**Cl**	0.086		H 1
Pb**Cl_2**	0.052±0.003		K 18
Pb**Br_2**	0.044±0.001	95	C 1
α-Ag**I** (solid, calc.)	0		K 31

errors estimated according to the previous chapter. The confidence levels are given when known.

It is tempting to try to find systematic relations between all the known mass effects. We shall first look for empirical relations and then discuss their physical interpretation. After determining the mass effects for **LiCl**, **CdCl$_2$** and **TlCl**, Klemm [K 15] stated that the mass effect seemed to depend on the atomic weight. When also the effect for **ZnCl$_2$** was known, he worked out an empirical relation [K 26] for the chlorides, with which also the sole measured iodide, solid α-AgI, fitted in. Klemm's formula can be written[1]

$$\mu^+ = -0.15\left(1+\frac{1}{2.1}\cdot\frac{m^+}{m^-}\right)^{-1} \tag{41}$$

m^+ is the mass of the cation and m^- of the anion (Cl, Br, I). This formula was tested by the subsequent experiments, where the mass effects for **ZnBr$_2$**, **AgCl** and **CuCl** gave agreements well within the experimental error. (The formula has never been claimed to be an "exact" relation, and real deviations of at least ten per cent should be allowed without questioning the validity of the formula). The only remarkable deviations have shown up for **PbCl$_2$** and **LiBr**. The mass effects calculated from eq. (41) are given in table 20. Since twice as many mass effects are known now as when Klemm gave the formula (41), it is tempting to see if a "better" formula can be derived from the increased lot of information. If the mass effect for each salt is given the same weight (**LiCl** and **PbCl$_2$** are only counted once. The different accuracy of the values is neglected) a least-squares fit gives the formula:

$$\mu^+ = -0.249\left(1+\frac{m^+}{0.843m^-}\right)^{-1} \tag{42}$$

The mass effects corresponding to this new formula are also given in table 20. We see that the new formula is not an improvement, since only the experimental values for **LiBr** and **PbCl$_2$** fit better with the new formula (42), and the values for **CuCl** and **ZnCl$_2$** fit about as well for both (41) and (42), while the remaining six values fall closer to eq. (41).

The two mass effects measured in nitrates fall far below what has been found in the halides. If we summarize these two effects in the same way as in (41) and (42) we get

$$\mu^+ = -0.054\left(1+\frac{m^+}{85}\right)^{-1} \tag{43}$$

It is obvious that the constants in this formula are very approximate, but certainly there is a marked difference between the mass effects for halides and nitrates. Some problems in connection with this fact will be discussed in chapter XVI.[1]

---

[1] The superscripts + and — have been interchanged in fig. 5 of ref. [K 17].

No attempt has been made to summarize the known mass effects for anions in molten halides, table 21. The large difference between the effects found in $PbCl_2$ and TlCl gives doubt as to the value of any such attempt.

The atomic weights have always been used for m^+ and m^- in the formulae (41), (42), and (43). It is of course of no importance if e.g. arithmetic means are used instead, when the expected mass effect is estimated for a salt where no experimental determination has been made. The value of these formulae lies in the possibility to estimate the enrichment that can be expected in a planned experiment. Eq. (41) has thus been a valuable guide in all enrichment work carried out after Klemm had proposed the formula.

The mass effects derived from the published experiments with aqueous solutions are lower than those found for molten halides, but higher than the nitrate effects. There are, however, not experimental data enough for a general comparison between melts and aqeous solutions.

Klemm has given much effort to finding a physical interpretaion of the observed mass effects. Already in connection with the α-AgI experiments [K 12] he discussed the kinetics of ion migration from the point of view that the probability for an ion to change place in a lattice (or lattice-like structure) depends on the frequency with which the ion oscillates. Klemm worked out these ideas to give a relation of the same form as the empirical eq. (41) between the mass effect and the masses m^+ and m^-. The first version [K 17] was later modified [K 31] to the following expression:

$$\mu = -\frac{1}{2} \cdot U \cdot \frac{z_s}{z} (1 + m/M)^{-1} \tag{44}$$

U is the transport number ("Selbstüberführungszahl"). z is the total number of jumps (per unit time) the mobile ions make in a lattice-like structure. Of these jumps only z_s are spontaneous, while the other jumps are induced by processes in the surrounding part of the lattice. Only the former are mass dependent, as they depend on the frequency of oscillation of the ion with mass m relative to the "surrounding" mass M.

---

[1] *Note added in proof:* M. Chemla [C 14] has recently fractionated the lithium isotopes by electromigration in a zone of $LiNO_3$ on a strip of asbestos paper impregnated with a molten mixture of KNO_3 and $NaNO_3$. The ratio $^7Li/^6Li$ was reduced from 11.5 to 5.0. The relative difference in velocity was estimated to 3%, corresponding to a mass effect of –0.2 — about 4 times more than what we have found in our experiment with molten $LiNO_3$. It is difficult to say if the accuracy of Chemla's $\Delta w/w$ is great enough to confirm the existence of a real discrepancy between the mass effects measured in the two experiments.

KLEMM has also studied the transport mechanism from the point of view of thermodynamics of irreversible processes [K 27]. He expresses the conductivity, the mass effect, μ^+ and μ^-, and the coefficient of self-diffusion, D^+ and D^-, as functions of r_{jk}, the coefficient of friction between the components j and k.

If we assume that z_s/z in eq. (44) is a constant (at least to a first approximation), we can expect a formula of the type (41) or (42) to be valid if U^+, the transport number for the cations, does not vary much from salt to salt. Unfortunately this quantity is not known for most salts. The first measurements were reported in 1954 by DUKE and LAITY [D 4] for molten $PbCl_2$. They have later continued their work on TlCl [D 5] and the nitrates $LiNO_3$, $NaNO_3$ and KNO_3 [D 3] (cf. chapter XVI). For the halides they have found

$$\begin{array}{lll} PbCl_2 & U^+=0.24 & U^-=0.76 \\ TlCl & U^+=0.51 & U^-=0.49 \end{array}$$

It is very interesting to compare the U^+ ratio for these two salts with the ratio between the mass effects. Hence, $\mu^+_{Pb}/\mu^+_{Tl}=0.6$ and $U^+_{Pb}/U^+_{Tl}=0.5$ This agreement is a support for the theory, but on the other hand we have for the anions (table 21) $\mu^-_{Pb}/\mu^-_{Tl}=0.6$ and $U^-_{Pb}/U^-_{Tl}=1.5$, which is in contrast to what is expected from (44). It is obvious that the transport numbers must be determined for many more molten halides before a definite test of the theory can be made. It should be mentioned in this connection, that the transport numbers for most halides have been measured in the solid state by TUBANDT and coworkers [T 2]. They found that nearly all uni-bivalent halides are pure anion conductors but that uni-univalent halides are predominantly cation conductors, where the anion transport number becomes significant with increasing temperature. (For a review of ionic conductance in solid salts see [J 2].)

There is no indication from the experimental data that the mass effect is temperature dependent. The two runs with $PbCl_2$ thus give the same result, although there was a difference of about 100°C in the operating temperature. This can be compared with the strong temperature dependence of the mass effect for electromigration in molten metals (the Haeffner effect) [L 16], where the number of mobile ions increases strongly with temperature.

The mass effect is proportional to the percentage of spontaneous jumps (eq. 44). The ratio z_s/z might be different in mixtures of salts from in a pure melt, because in the mixture all the ions surrounding a "hole" in the "lattice" are not of the same element, and the tendency for induced jumps might be different for e.g. Li^+ and Pb^{++} ions in a molten mixture of LiCl and $PbCl_2$. When measuring the mass effect for LiCl Klemm and coworkers [K 13] found that there was 2 molar per cent of KCl present as an impurity. The heavy isotope ^{41}K had been enriched together with ^7Li. The mass effect for potassium was found to be -0.32, which is about three times more than what can be expected for pure KCl (eq. 41). This extreme value has been explained by the ratio z_s/z being higher than usual for the diluted KCl. The fact that the conductivity for a molten binary mixture is not an additive quantity, cf. chapter XIV, makes the uncertainty higher for this mass effect than for the effects measured in pure melts. Monse [M 8] has made a systematic investigation of the mass effect for LiCl in the binary mixture of LiCl and $PbCl_2$. He has found the same mass effect (within experimental error) for the whole range from 10 to 100 volume per cent of LiCl.

CHAPTER XVI

Halides and nitrates — a comparison of physical properties

As we have already seen, the measured mass effects for $LiNO_3$ and KNO_3 fall far outside the systematics that seems to fit fairly well for all the halides investigated so far. The only systematic difference between the nitrate experiments on one hand and the work with the halides on the other hand, is that in the latter runs the enrichment was produced at a boundary between two salts in the separation column, while in the former runs we only worked with one salt and enriched the heavy isotope in the small anode compartment, from which a certain amount of salt was lost by evaporation. We were always very careful to collect all the salt that had condensed in the upper, cooler parts of the apparatus. Let us consider the KNO_3-experiment [L 3]. Assume that the mass effect was -0.070, which would about satisfy the "halide rule" (eq. 41) with $m^+=39.1$ and $m^-=15.5$.[1] A rough calculation shows that in order to achieve this mass effect, instead of the observed value, we must assume that some 600 mg KNO_3 with the final isotopic composition of sample nr 1 (7.64 % ^{41}K) have been lost by evaporation. It is obvious that we would have noticed if any such quantity had condensed in the upper part of the apparatus or passed on with the gas stream to the wash bottle with paraffin oil that the outgoing gas bubbled through. In the actual experiment we could collect only 13.8 mg of condensed KNO_3 from the upper part of the anode compartment. In the experiments with $LiNO_3$ we collected the salt in the upper part of the anode compartment as special samples C:0 and D:0 [L2]. In the mass analysis we found for D:0 an isotope composition (6.05 per cent Li) between the normal value (7.4 per cent) and that of the most enriched sample D:1 (5.70 per cent), which showed that the salt in this sample had been separated from the bulk volume at the anode gradually during the course of the run. In this special case the $LiNO_3$ melt had violently attacked some lead-glass in the glass-tube holding the platinum anode. Some lithium might, of course, have been lost by diffusion in the attacked glass, although the remains of the rod were crushed and boiled with water to recover all soluble salts (p. 77).

---

[1] When applying eq. (41) to nitrates it can be discussed if m^- is to be taken as the mass of the whole nitrate ion or as the average mass of the oxygen and nitrogen atoms in this ion. In the former case the "vibrating unit" is the nitrate ion as a whole. The latter case, where each atom is a "vibrating unit", ($m^-=15.5$, mean mass of the atoms) has been chosen here, since this case gives the lowest mass effects for the nitrates.

Summarizing, we might say that although the measured mass effects might be systematically somewhat low because of loss of salt by evaporation, there is no reason to believe that such a process can explain the observed deviations between the nitrates and the halides.

Before trying to find an explanation for the observed difference between the two groups of salts it might pay to look for other systematical deviations in physical properties. The equivalent conductivities [B 4] are given in table 22 for nearly all the salts in which mass effects have been measured so far. The third column gives the quantity $\varkappa \frac{V}{n}$, where $\varkappa$=conductivity and V/n=volume of one gram equivalent.

The values are chosen close to the operating temperatures of the enrichment runs. The value for $ZnCl_2$ falls so far out from the others, that we cannot consider the equivalent conductivity as a quantity for which there is a general difference between the two groups of salts. If we limit our comparison to the alkali halides and nitrates, we find

Table 22. Equivalent conductivities [B 4].

Salt	Melting point °C	$\varkappa \cdot V/n$ $\Omega^{-1}\,cm^2\,eq^{-1}$
$LiNO_3$	255	42.1 at 300°
KNO_3	334	37.2 » 355°
LiCl	613	167 » 620°
CuCl	422	96.3 » 533°
$ZnCl_2$	262	2.35 » 500°
AgCl	453	126 » 600°
$CdCl_2$	568	55.8 » 623°
$PbCl_2$	501	42.0 » 508°
TlCl	430	50.2 » 450°

the same systematical decrease in conductivity when we go from Li to Cs [L 11], while systematically the halides are the better conductors. This indicates that the halide ions are more mobile than the nitrate ions, which also is to be expected from the considerations below. It might be mentioned in this connection that $AgNO_3$ is as good a conductor as $LiNO_3$, while AgCl falls between LiCl and NaCl.

So far very few measurements have been done on transport numbers in pure fused salts. The following values for U^+ (transport number of the cation) have been measured by DUKE and LAITY [D 4]

$LiNO_3$	0.85 ±0.04	[D 3]
$NaNO_3$	0.74 ±0.02	[D 3]
KNO_3	0.62 ±0.02	[D 3]
$PbCl_2$	0.242±0.014	[D 4]
TlCl	0.51	[D 5]

It is impossible to make definite conclusions without more experimental data, as the nitrates are measured for light and the halides for heavy elements, but there is some support for our assumption from the conductivities that the nitrate ions are less mobile than the halide ions.

One obvious fact is that for $LiNO_3$ and KNO_3 the ratio between the mass effects ($\mu^+{}_{Li}/\mu^+{}_K = 1.35$) coincides within experimental error with the ratio between the transport numbers ($U^+{}_{Li}/U^+{}_K = 1.37$). If we evaluate M and z_s/z (assuming these two quantities to be approximately equal in the two salts) by inserting the experimental μ^+ and U^+ in eq. (44), we find that M (the mass of the surrounding) is very great, and that about 12 per cent of the jumps are spontaneous. This attempted estimation is of course very uncertain, and one must be very careful when drawing conclusions from the experimental data.

Viscosity is another property that might be of interest for us. HARRAP and HEYMANN [H 7] have treated data for 2 nitrates ($NaNO_3$ and KNO_3) and 6 halides ($PbCl_2$, $PbBr_2$, AgCl, AgBr, $CdCl_2$, $CdBr_2$) when applying different theories of viscosity to ionic liquids. When considering the viscosity as a function of the specific volume they found a certain difference between the two groups of salts, which they ascribed to the large difference in effective size between the halide and nitrate ions. They, however, also found differences of nearly the same order between the cadmium halides and the other salts, which is consistent with the assumption that the melts of the cadmium halides contain autocomplexes. (The fact that the mass effect for $CdCl_2$ [K 14] follows the "halide rule" (eq. 41) does not support such an assumption).

HARRAP and HEYMANN also compare for several salts thermodynamical quantities, such as activation energy of viscosity, latent heat of fusion, work of cohesion, and energy of vaporization. There seems to be no systematic difference in the values given for halides on one side and nitrates on the other. FISCHMEISTER[1] [F 3] compares the entropies of fusion for the halides (F, Cl, Br, I) and nitrates of Li, Na, K, Rb, Cs, Ag and Tl. Again it is impossible to find deviations between the two groups of salts as a whole, although there is support for the assumption that a certain amount of aggregation or association occurs in the nitrate melts, which has earlier been postulated by DAVIS, ROGERS and UBBELOHDE [D 6]. FISCHMEISTER [F 3] has also compared the increase in volume when melting for the alkali halides and nitrates. The values for KNO_3 and $RbNO_3$ are much smaller than for the corresponding halides.

This brief comparison of different physical properties of the molten salts is of course somewhat restricted by the lack of complete data on all the salts that interest us, but it does not seem to have shown any real systematic differences between halides and nitrates. We have found some evidence that "aggregation" occurs in the latter, but why should this give such a difference in mass effect, when the assumed existence of autocomplexes in $CdCl_2$, at least as strongly supported by the physical data, does not show up as a deviating mass effect.

We can now turn our interest to "intra-molecular" properties. It might be interesting to compare the degree of covalency [P 2, C 7] for the two groups of salts, but the existing data do not cover all salts of interest, and are not accurate enough [H 8, H 7] to be of real value for our discussion.

It is a well known fact, cf. e.g. [S 7], that the structure of the solid often remains to a certain extent in a melt. Thus BUES [B 8] has shown by Raman spectroscopy that molten $ZnCl_2$ and $CdCl_2$ keep much of the layer-structure of the crystal. X-ray studies of other molten salts have given similar results; e.g. [L 17]. Thus it might pay for us to compare the structures of the salts in the solid state [L 15]. $LiNO_3$ and KNO_3 both melt from a calcite-like structure. (This is also the case for $NaNO_3$, $RbNO_3$ and $AgNO_3$). FISCHMEISTER [F 3] argues from the entropies of fusion and the densities that we have this structure in all molten alkali nitrates, i.e. we have a CsCl → NaCl transition coinciding with the melting of $CsNO_3$ and NH_4NO_3 (also $TlNO_3$). If we reduce our interest to halides with measured mass effects we find several different types of structure in the solid state, thus LiCl, LiBr and AgCl are of the NaCl type, TlCl of the CsCl type, CuCl of the ZnS type, $ZnCl_2$, $ZnBr_2$ and $CdCl_2$ of the $CdCl_2$ type and $PbCl_2$ and $PbBr_2$ of the $PbCl_2$ type. All these halides can, in contrast to the nitrates, be joined in under the same "μ-rule", (eq. 41 or 42), although there is much more similarity e.g. between the calcite and the rock salt structures than between the latter and a layer structure of the $CdCl_2$-type or a chain structure of the $PbCl_2$-type.

---

[1] I am much obliged to Dr. H. FISCHMEISTER for lending me his unpublished manuscripts [F 3] and [F 4].

There is, however, one fact to be pointed out, which might be significant. The halide ions, consisting of one atom, have spherical symmetry, which is not the case with nitrate ions, where four atoms are in the same plane [L 15, P 2, W 4, F 4]. It was earlier assumed, [W 4] that the nitrate ion could achieve spherical symmetry by rotation, but recent investigations have shown [F 5, F 4] that the spatial requirements for free rotation are not satisfied in the nitrate crystals. According to FISCHMEISTER [F 4] this is not the case even in the melts. The lack of spherical symmetry is a further support for our conclusion from conductivity data and transport numbers, that nitrate ions are less mobile than halide ions.

Summing up this discussion, we have found no explanation why the ratio z_s/z in eq. (44) is more than twice as high in the halides as in the nitrates. We have found it difficult to point out systematic differences in other physical properties although there is the fundamental difference in the structure of the anions themselves. On the other hand we have found no reason why the mass effects should follow the same rule. The conclusion is that collecting further data on mass effects might be of value for the study of the nature of ionic melts. More data on transport numbers and self diffusion coefficients are also needed for the same purpose.

CHAPTER XVII

Review of isotope enrichment applied to certain elements

Klemm's method has so far been used for enriching isotopes of ten elements, giving relative enrichments of at least about 10 per cent. (Separation factors at least $\simeq 1.01$). It is of interest to make a comparison with enrichments achieved by other methods. It can be appropriate to extend a review to cover also some elements where Klemm's method has not yet been tried, but where there is reason to believe that their light or heavy isotopes can be enriched with the present techniques, perhaps slightly modified e.g. for work at temperatures round 700° or 800°C. This survey does not claim to be complete, but we hope most work published up to the end of 1955 is covered. References on the enrichment of isotopes of other elements than those treated here can be found in the bibliography compiled by BEGUN and ALLEN [B 9]. It is to be observed that isotopes of all the elements treated here are now available commercially from the calutrons at Oak Ridge [K 32] and Harwell [A 5, A 6, D 7]. Reference to these sources shall not be repeated for each element.1)

It might be pointed out that most investigators in the 1920-ies and 30-ies used so crude methods for measuring the isotopic composition (by determining density of crystals, atomic weight, etc.), that they could not detect the minute enrichments that may have taken place in some of their experiments. Specially due to the great development

---

1) It might be remarked, that a distinction between mass spectrographs, mass spectrometers and isotope separators always is somewhat arbitrary, as they all use electrostatic and magnetic fields to separate isotopes according to their masses; cf. [T 3]. Here we shall note only those investigations where the aim is said to be either producing pure isotopes for nuclear physics work or developing a separator unit for the production of pure isotopes. Concerning other work with mass spectrographs, reference must be given to monographs on this subject, e.g. [B 10, E 3].

in mass spectrometry, it is now possible to detect very small changes in abundances. On the other hand there is reason for doubting the results of some work, specially where the enrichment claimed is very close to the experimental error. In some cases the results reported by different authors using similar methods are not in good agreement. We have, however, not attempted to examine the reviewed work critically, as a discussion of this kind is beyond the scope of this review. Hence, the positive or negative results claimed in the original papers are always quoted without comment.

In a few cases reference is given to papers that have not been available for our study. When possible at least two abstracts of these papers, or other quotations of the contents, have been studied. Still it is sometimes possible that minor misunderstandings might occur where the second-hand sources are brief or even in contradiction with each other.

Lithium

7.4 % ^{6}Li   92.6 % ^{7}Li[1]

Very much effort has been spent on separating the isotopes of lithium, obviously because the great relative mass-difference (14.4 per cent) made such differences in the physical properties of the two isotopes plausible, that measurable enrichments could be expected even after fairly simple manipulations. Lithium being the lightest metallic element also meant that its compounds were suitable for enrichment methods that cannot be applied to the two lighter elements hydrogen and helium.

The first, unsuccessful, attempts reported were by diffusion in lithium salts [M 9], a method for which positive results were reported first in 1952 when Rasch [R 2] studied the diffusion of metallic Li in molten Pb metal. He obtained a mass effect of -0.47, or in other words the ratio of the coefficients of diffusion $^{6}D/^{7}D$ was very nearly $\sqrt{7/6}$.

The methods to be tried next were both of electrolytic nature:

---

[1] The percentages given in the head of each section are taken from recent papers without special effort being paid to selecting the "correct" abundance in cases where there is a considerable deviation between the values given by different authors. When quoting the results of different enrichment experiments, the abundances stated in the papers will be given. The separation factors will also be calculated on these original figures.

electromigration in aqueous solutions [K 1, K 2, K 3], cf. chapter I, and electrolysis [K 1, K 2, K 9, K 33, E 4, C 8, T 4, T 5, T 6, H 9, J 3].[1]

Concerning the latter method, solutions of different lithium salts were electrolyzed, mostly with mercury cathodes, from which the deposited lithium was extracted. Although the first of these experiments were unsuccessful [E 4, C 8], HOLLECK [H 9] could report in 1938, that he had enriched the light isotope from 7.8 to 12.8 per cent (over all separation factor $Q = 1.7$; cf. eq. 2.) Further successful work with this method has been reported [J 3].

Another early method that gave positive results was chromatography (we shall not distinguish between pure chromatography and ion exchange processes in resins). TAYLOR and UREY [T 4, T 5, T 6] showed in 1937 that ^{6}Li was preferentially held by the resin in a zeolite column. Also later work with ion exchange has given positive results [D 8, G 4, G 5], but it seems that so far this method has not been as successful as expected, although GLUECKAUF, BARKER and KITT [G 4] reported that in one successful run the first drops of the eluted lithium salt contained as little as 0.5 per cent ^{6}Li. The total enriched quantity of ^{7}Li was about one tenth of what was expected from theory.

LEWIS and MACDONALD [L 18] were very successful with a countercurrent extraction process, utilizing the difference in distribution coefficients for the lithium isotopes when fine drops of lithium amalgam fell through a column filled with a solution of LiCl in C_2H_5OH or of LiBr in a C_2H_5OH-dioxane mixture. ^{6}Li was enriched in the solution with an increase in abundance from 8 to 16.3 per cent ($Q = 2.2$).

Other chemical exchange methods have been tried. An Austrian group [W 5] has enriched ^{7}Li in Li_2CO_3 by fractional crystallization, a method that was tried unsuccessfully already around 1923 [K 2]. An enrichment attempt by extraction of an aqueous solution of LiBr with methyl-amyl-alcohol was unsuccessful [T 4]. UREY [U 2] has calculated equilibrium constants of some chemical exchange reactions.

Many other enrichment methods have been tried on lithium; thus there have been reported attempts by thermal diffusion in aqueous solutions [S 8] and by an electrogravitational method based on differences in mobility for cations in solution [M 10]. Among the methods suggested by different authors might be mentioned: distillation of liquid lithium metal, of LiH or of other compounds [Y 1], partition between molten Li and Na [Y 1] and solution of Li in liquid NH_3 [Y 1].

---

[1] We shall use the term (countercurrent) electromigration for processes where differences in ion velocities cause the enrichment, while the term electrolysis will be reserved for methods where the enrichment is caused by the processes at the electrodes (e.g. differences in discharge potentials).

Holleck [H 20] has shown in a statistical treatment of the problem, that isotopic effects cannot be expected for lithium in the sedimentation of particles even as small as of the colloidal size.

It is probably no overstatement to say that among all the statistical methods applied so far, the greatest success has been achieved by electromigration in molten LiCl. After the first successful experiment [K 13] Klemm has reported other work where the aim was to produce strongly enriched samples of either the light or heavy isotope [K 19, K 24]. In the latest experiment [K 24] ^{7}Li was produced, where the abundance of ^{6}Li was as low as between 0.1 and 0.01 per cent. Because of the smaller mass effect [L 2], $LiNO_3$ is not as suitable as LiCl for producing extreme enrichments. Work is in progress with countercurrent electromigration in aqueous solutions [C 9].

It remains to review the work with the electromagnetic method. In 1927 Morand [M 11] developed a mass spectrometer with which he separated the lithium isotopes. He considered it possible to collect quantities of the order of 0.01 mg of ^{7}Li. In 1934 the first experiments were reported, where the purpose was to produce separated isotopes and use them for nuclear physics research. This was done independently by Oliphant, Shire and Crowther [O 1] in England and Smythe, Rumbaugh and West [S 9] in U.S.A. Many other successful separations have been reported over the last 20 years [R 3, Y 2, W 6, B 11, A 5]. More as a curiosity it might be mentioned in this connection, that an ion current of $2.7 \cdot 10^{-8}$ A ^{7}Li has been obtained by means of a radiofrequency electric field [Y 3].

Magnesium

78.6 % ^{24}Mg 10.1 % ^{25}Mg 11.3 % ^{26}Mg

Pilley [P 1] tried to separate the isotopes by electromigration of Mg^{2+} ions from an anode volume containing $MgSO_4$ into an agar-agar diaphragm with 0.5 n $(NH_4)_2\ SO_4$. The expected enrichment could not be detected. Martin [M 12] has suggested for $MgSO_4$ a countercurrent electrochemical exchange process where the enrichment was due to the exchange reaction between Mg^{++}aq-ions and undissociated $MgSO_4 \cdot$

aq molecules. The first experiments with this method showed some enrichment of ^{26}Mg [M 13, J 4] although not of the expected order, which was presumed to be caused by imperfections in the experimental arrangement. Further work is in progress with magnesium salts [M 13]. A successful enrichment of D_2O by this method showed that a chemical exchange effect was of importance here [M 14].

No attempts have been made so far to enrich magnesium isotopes by Klemm's method. From the general systematics (eq. 41) we can expect a mass effect of -0.11 for Mg in molten $MgCl_2$. This melt has a suitable conductivity [B 4], although experimental difficulties might be expected from thermal decomposition when in contact with oxygen or water vapour [G 2].

Early attempts to utilize differences in the discharge potentials in the electrolysis of solutions of magnesium salts have been reported [K 2]. Chemical methods have also been tried [N 4]. The only successful enrichments so far have been made by the electromagnetical method. Magnesium isotopes have thus been separated both by the calutrons and by several smaller isotope separators [B 23, B 11, T 3, B 12, B 13, Z 1, A 7, E 5, N 1].

Chlorine

75.4 % ^{35}Cl   24.6 % ^{37}Cl.

Diffusion seems to be the method first tried for the enrichment of chlorine isotopes. Harkins and coworkers [H 10, J 8] studied the diffusion of HCl gas through tubes of porous clay. The best result of these experiments was an increase in atomic weight of 0.055 for a heavy fraction and a decrease of 0.039 in a light fraction (Over-all separation factor $Q = 1.30$). A couple of unsuccessful experiments with diffusion of salt solutions have been reported [M 9, V 1]. A "free diffusion" method has been tried without success. [L 19].

In contrast to gas diffusion, thermal diffusion has proved to be a very successful method for separating the chlorine isotopes. This was evident already after the first reports by Clusius and Dickel in 1939 [C 10]. Working with HCl gas, they produced a light fraction with 99.6 per cent ^{35}Cl and a heavy fraction with 99.4 per cent ^{37}Cl. Good separations have also been reported from other laboratories working with HCl gas [A 8, S 10, K 34]. Theoretical calculations have been carried out on the thermal separation ratio [B 25], the energy consumption [S 11] and the dimensions of units for large scale production [R 4].

Thermal diffusion has been used in the liquid phase by FOURNIER [F 6], working with CCl_4 and by ALEXANDER and DREYER [A 9] with C_2HCl_3. It seems from the latter work as if thermal diffusion is about as effective in a liquid as in a gas.

A distillation method[1] was tried already in 1921, when BRÖNSTED and HEVESY [B 14] partially evaporated a strong solution of HCl at about −50°C by which means ^{35}Cl was slightly enriched in the condensed part of the HCl. Rectification has been tried for several liquids, such as Cl_2 [G 6, D 9], CCl_4 [G 7, S 12, R 5, B 15], $CHCl_3$ [B 15] and CH_2Cl_2 [H 11, S 12] but, when achieved at all, only a slight shift in isotopic composition could be reported, the best result being found for $CHCl_3$, where the isotopic ratio was shifted by amounts up to 12 % [B 15]. For a discussion of the observed effect see [B 24].

A so called diffusion-distillation process has been tried for the separation of the chlorine isotopes using o-dichlorobenzene [W 7].

BEAMS and co-workers have applied their evaporative centrifuge method to CCl_4 [B 16] and C_2H_5Cl [A 10] for separating the chlorine isotopes. In their experiment with C_2H_5Cl the isotopic ratio in the first and last samples differed by 12 per cent.

No isotope enrichment could be reported, from the first experiments with chemical exchange [N 2], but a slight enrichment of ^{35}Cl in the liquid phase was obtained in a study of the exchange between HCl-gas and HCl in H_2O [U 1]. The equilibrium constants of certain exchange reactions have been calculated [U 2]. LANGVAD [L 20] has studied the isotope shift obtained by ion exchange chromatography. He obtained a small but significant fractionation of the isotopes.

Fractional crystallization of salts [O 2] and fractional desorption of HCl [S 13] have been attempted unsuccessfully for separating the chlorine isotopes. Some attempts have been made to enrich the chlorine isotopes by means of photochemical reactions [H 12, K 35, K 39]. A slight enrichment was reported from the latter attempts [K 35, K 39].

Electrolysis of aqueous solutions (cf. note on p. 93) was first tried by KENDALL in 1923 [K 1, K 2]. An investigation on residues from large-scale industrial electrolysis of NaCl and KCl [D 9] showed no effect exceeding the limits of error for the atomic weight determinations, but Yacoubyan [Y 4] found a slight but evident enrichment of ^{37}Cl in the residue (1/1400 of the initial volume) when electrolyzing a HCl—NaCl solution. Johnston and Hutchison [J 5, H 13] found an isotopic effect when electrolyzing NaCl solutions with Pt-anodes.

---

[1] The term distillation is used to cover two methods where the isotope effect depends on entirely different mechanisms. In the free evaporation method [B 14] the effect depends on the difference in rate of evaporation in vacuum, while in the fractional distillation (rectification) process the effect is caused by differences in the vapour pressure of the two compounds.

The early electromigration work was unsuccessful [K 1, K 2, K 3, P 1], but in the 1940-ies Madorsky and Straus [M 1] enriched ^{35}Cl from 75.76 to 80.7 per cent in the anode compartment of an electromigration cell with NaCl as the electrolyte in a 474 hours run. Successful enrichments of ^{35}Cl have been carried out by electromigration in molten $PbCl_2$ [K 18], TlCl [H 1] and $ZnCl_2$ [L 6]. Herzog has produced TlCl with 98.4 per cent ^{35}Cl ($Q=20$) [H 1].

The chlorine isotopes have, of course, been separated electromagnetically, e.g. by collecting $CuCl^+$ ions [C 11].

Summarizing, we find that very many processes have been investigated for effects that lead to an enrichment of one of the chlorine isotopes. The measured over-all separation factors have mostly been too moderate to encourage further work on a large scale. The best results have been obtained by thermal diffusion, by electromigration in molten salts and with mass separators.

Potassium

93.26 % ^{39}K 0.011 % ^{40}K 6.73 % ^{41}K.

The first successful separation was made electromagnetically in 1934 by Smythe, Rumbaugh and West [S 9]. They produced 1 mg ^{39}K in 7 hours. (See also [S 14].) The modern mass separators of the calutron type have, of course, a much larger production rate [L 21].

Among the statistical methods, fractional crystallization [K 2], ion exchange chromatography [T 5, T 6, D 8, E 7], chemical exchange [J 7] and distillation (free evaporation) [H 19] have been tried. Still other methods have been proposed [B 22]. Hutchison [H 14] has measured the electrolytic separation coefficient for aqueous solutions of KCl at a flowing-Hg cathode. A team led by Brewer, Madorsky and Westhaver [B 1, B 2, W 2] has studied countercurrent electromigration in aqueous solutions of potassium salts. They succeeded in changing the abundance ratio ($^{39}K/^{41}K$) from normally 14.2 to 24 or to 9.1 when enriching ^{39}K or ^{41}K, respectively. The runs took about 500 hours. Other work in aqueous solutions is in progress [C 9]. Electromigration in molten salts has also been tried successfully. Klemm and coworkers [K 13] found that the abundance ratio changed from 14.0 to 11.3 in 48 hours for KCl present as an impurity in LiCl. No work has so far been done with pure molten potassium halides, but from the general systematics (eq. 41) we can expect a mass-effect of about $-0{,}098$ for KCl. The only pure molten salt investigated so far is KNO_3 [L 3] where the abundance ratio was decreased from 13.9 to 12.1 in 145 hours. It might be of interest to mention that both ^{39}K and ^{41}K were enriched in the same experiment [L 22] when a direct current was passed through molten K-metal in capillary tubes. In 355 hours the ^{41}K abundance was changed to the extreme values 7.03 and 6.30 per cent.

Calcium

96.92 % ^{40}Ca 0.64 % ^{42}Ca 0.13 % ^{43}Ca
2.13 % ^{44}Ca 0.003 % ^{46}Ca 0.18 % ^{48}Ca

An enrichment effect has been reported for work with ion exchange [E 7, L 23]. No attempt has yet been made by electromigration in molten halides, but we can expect (eq. 41) a mass effect of the order of -0.098 for $CaCl_2$.

The calcium isotopes have, of course, been separated electromagnetically.

Copper

68.94 % ^{63}Cu 31.06 % ^{65}Cu

Isotope enrichment has been carried out by countercurrent electromigration in a solution of Cu_2SO_4 [M 2] and in molten CuCl [L 5]. The light isotope was enriched in both cases, with an over-all separation factor of 1.02 in the solution and of 1.19 in the melt, although the melt was electrolyzed about 20 per cent of the time used for the solution experiment. The isotopes have been separated electromagnetically at several laboratories, cf. [M 17, W 8]. Another method that has been tried with success is diffusion. Klemm [K 25] reached a separation factor of 1.055 for the diffusion of copper ions into silver sulfide.

Zinc

48.89 % ^{64}Zn 27.81 % ^{66}Zn.
4.07 % ^{67}Zn 18.61 % ^{68}Zn 0.62 % ^{70}Zn

A slight fractionation of the isotopes by distillation of the metal [E 6] was reported already in 1923. Korsching and Wirtz [K 36] have reported a certain fractioning of the zinc isotopes by thermal diffusion in a $ZnSO_4$ solution. The light isotopes have been enriched by electromigration in molten $ZnCl_2$ [K 16] and $ZnBr_2$ [K 17]. The isotopes have been separated electromagnetically in many laboratories [B 23, Z 1, B 12, B 13, A 7, L 24].

Gallium

60.2 % ^{69}Ga   39.8 % ^{71}Ga

The isotopes have been enriched electromagnetically [B 17] and by sending a direct current through the molten metal [N 3]. It is doubtful whether Klemm's method can be applied without difficulties, because of the tendency $GaCl_2$ has to decompose thermally into $GaCl_3$ and Ga [L 25, C 12, cf. G 3]. Only the bivalent chloride is a good conductor [G 3, H 15].

CLUSIUS and HITZIG [C 12] have suggested that the gallium isotopes could be fractionated in the reaction between metallic gallium and $Ag^{35}Cl$.

Bromine

50.4 % ^{79}Br   49.6 % ^{81}Br

Isotope enrichment by fractional crystallization of NH_4Br was tried in vain already in 1925 [R 6]. SHERR [S 15] obtained a slight separation of the isotopes when studying the diffusion of CH_3Br gas in a set of mercury diffusion pumps, and HUMPHREYS [H 16] studied the effect of a centrifugation of C_2H_5Br. Electromigration in molten $PbBr_2$ gave an increase in the ^{79}Br abundance to 56.5 per cent [C 1]. Two papers have been published on separation with the Oak Ridge calutrons [C 11, B 18]. The isotopes have also been separated in other separators, e.g. [K 37]. Work is in progress with thermal diffusion [C 9], a method that has been studied theoretically [B 25]. The equilibrium constants of some exchange reactions have been calculated [U 2].

Rubidium

72.8 % ^{85}Rb   27.2 % ^{87}Rb

The occurrence of a natural radioactive isotope, ^{87}Rb, has given a special interest to the problem of separating the isotopes. This was done electromagnetically already in 1937 by Hemmendinger and Smythe [H 17] and by Walcher [W 9]. It might be of interest to mention that separations have been made also with a pure electric mass filter [P 3, O 3]. Ramirez [R 7] has enriched ^{85}Rb from 72.7 to 73.8 per cent by countercurrent electromigration for 200 hours in a RbOH solution. Klemm's method has not been tried on the halides, where we can expect a mass effect of about −0.070 in RbCl. A study of electromigration in molten $RbNO_3$ is in progress [L 26].

Strontium

0.5 % ^{84}Sr   9.8 % ^{86}Sr
7.0 % ^{87}Sr   82.7 % ^{88}Sr

The only successful separations reported have been made electromagnetically [B 19]. We can expect a mass effect of about −0.069 for electromigration in molten $SrCl_2$.

Silver

51.9 % ^{107}Ag   48.1 % ^{109}Ag

^{109}Ag has been enriched in solid α-AgJ [K 11, K 12] and ^{107}Ag in a AgCl-melt [F 1], both times by electromigration. A search for an isotope effect when electroplating silver on a rotating stainless-steel cathode was in vain [R 8]. The isotopes have been separated in quantity both by calutrons and smaller separators [W 10 a, W 11, M 17]. Also other methods have been tried [B 26].

Cadmium

1.2 % ^{106}Cd   0.9 % ^{108}Cd   12.4 % ^{110}Cd   12.7 % ^{111}Cd
24.1 % ^{112}Cd   12.3 % ^{113}Cd   28.8 % ^{114}Cd   7.6 % ^{116}Cd

The light isotopes have been enriched by electromigration in a $CdCl_2$-melt [K 14], while an electroplating method [R 8] failed to give any separation. Distillation of the metal in high vacuum gave a negative result [S 16]. Isotope separators have, of course, been used with success, cf. e.g. [B 13].

Indium

4.2 % ^{113}In   95.8 % ^{115}In

Enrichments have been made with isotope separators [B 20, M 15], and by sending a direct-current through the molten metal ("Haeffner effect") [L 16]. The existence of mono- di- and trivalent halides gives rise to complications if the isotopes are to be enriched by Klemm's method.

Tin

0.9 % ^{112}Sn, 0.7 % ^{114}Sn, 0.3 % ^{115}Sn, 14.4 % ^{116}Sn, 7.5 % ^{117}Sn
24.2 % ^{118}Sn, 8.5 % ^{119}Sn, 33.1 % ^{120}Sn, 4.6 % ^{122}Sn, 5.8 % ^{124}Sn

A diffusion-distillation method working with $Sn(C_2H_5)_4$ has been tried [W 7]. The isotopes have been separated electromagnetically in quantity, e.g. for superconductivity investigations [S 17, M 16, A 11].

It is likely that Klemm's method can be used e.g. on $SnCl_2$ in spite of the existence of two valencies.

Tin isotopes have been enriched by sending a direct current through the molten metal ("Haeffner effect") [K 40].

Rare earths

The separation of the rare earth elements is a problem that has challenged the chemists for about a century. This is not the place to review the work in this field, but a few words shall be spent on recent progress in developing good separation methods because of the similarity with isotope enrichment problems. Spedding, e.g. [S 18], and co-workers have had striking success with the ion exchange method, and Weaver and co-workers at Oak Ridge have developed and applied a continous countercurrent extraction process to the preparation of unusual quantities of these elements [W 12].

It is of interest to note that electromigration in aqueous solutions has given a more or less quantitative separation of some of the rare earth elements [K 4, K 5, K 8, K 9, C 13]. Electromigration in a molten mixture of the chlorides has not been tried, but data available on the conductivities of some chlorides [B 4] make it plausible that a good separation of at least some of the elements can be achieved in reasonable time.

The only successful enrichments of isotopes of rare earth elements have been made electromagnetically [K 32, A 6]. The mass assignment of the natural activity of ^{147}Sm can be mentioned as an example of such separations [W 13, K 38, L 27].

Thallium

29.5 % ^{203}Tl   70.5 % ^{205}Tl

The only statistical method with which success has been reported is electromigration in molten TlCl [K 15]. The first electromagnetic separation was made by WALCHER [W 10, W 11].

Lead

1.4 % ^{204}Pb   25.1 % ^{206}Pb
21.1 % ^{207}Pb   52.4 % ^{208}Pb

The possible identity of the chemical and physical properties of the lead isotopes was much discussed in the early days, when the existence of stable isotopes was discovered.

Attempts were made to separate the lead isotopes by fractional crystallization of $Pb(NO_3)_2$ [R 9], by centrifuging the molten metal [J 6], by distillation of $PbCl_2$ [H 18] and metallic Pb [H 18, R 10] and by a chemical reaction (Grignard process) [D 10, B 27, R 10]. – No appreciable separation was achieved in these early investigations. Electromigration in molten $PbCl_2$ has been used for enriching both the light and the heavy isotopes [L 4]. Concerning separation in calutrons see [B 21].

Conclusions

This review of work on the enrichment of the isotopes of some 15 elements shows that electromigration in fused salts has proved to be, on the whole, perhaps the most successful of the statistical methods tried on elements which have halides with a good conductivity in the molten state.

Summary

A series of isotope enrichments by electromigration in molten salts has been carried out during the last years. The running conditions are summarized in table 1 and the enrichments achieved are given in tables 2—13. Practical details such as the arrangement of the electrical circuits and the construction of the separation columns are discussed. The number of theoretical plates has been calculated for all samples. A comparison of all the data shows that the length of a theoretical unit is about twice as great for columns packed with quartz as for those with glass, but this length seems to be fairly unaffected by other parameters, such as grain size of packing or temperature during the run.

An attempt to reduce the necessary operating temperature by using salt mixtures in the column is described as well as trials of new cathode arrangements which, if successful, could have increased the versatility of the enrichment method.

There is an obvious systematics in the mass effects for the cations in halide melts, in fair agreement with the model given by KLEMM. The cation mass effects are much smaller for nitrates than for halides. A review of other physical properties of these melts does not show any corresponding division between nitrates and halides. It is possible that the observed divergence has something to do with the fact that the nitrate ion is a polyatomic unit lacking spherical symmetry.

The last chapter gives a review of attempts by various methods to enrich isotopes of Li, Mg, Cl, K, Ca, Cu, Zn, Ga, Br, Rb, Sr, Ag, Cd, In, Sn, rare earths, Tl, and Pb. On the whole, electromigration in molten salts has proved to be a widely applicable method, useful for at least some 15 elements.

Acknowledgements

The present investigation was carried out at the Department of Physics, Chalmers University of Technology, Gothenburg, Sweden. The work was financially supported by grants from "Svenska Atomkommittén" and from "Chalmerska Forskningsfonden".

I am in great debt to Professor N. Ryde for the confidence he has shown me by placing the facilities for this work at my disposal, and for the stimulating interest with which he has followed the progress of these investigations.

My thanks are in particular due to Dr. A. Klemm for introducing me into this field opened by himself some 15 years ago, for the friendly co-operation during his visits to Gothenburg, and for many enlightening discussions throughout the whole course of work.

My sincere thanks are due to Civ.-ing. S. Floberg and Civ.-ing. N. Sjöberg for their co-operation in some experiments, and to Civ.-ing. R. Rajgård, Civ.-ing. B. Stenemur and Mr P. Petterson for performing chemical analyses.

The mass analyses have been made at several laboratories and I would like to express my thanks to Docent E. Lindholm and Tekn. lic. E. Berne in Gothenburg, Fil. lic. C. Reuterswärd in Uppsala, Dr. H. Hintenberger, Dr. A. E. Cameron, Dr. W. Herr, Mr W. Herzog and Mr E. U. Monse in Mainz, Dr. H. F. Ehrenberg and Dr. G. Horlitz in Bonn, Dr. P. Eberhardt and Dr. P. Signer in Berne and Dr. G. H. Palmer at Harwell.

A grant from "Atomkommittén" made it possible for me to spend two valuable months at the Max Planck Institute of Chemistry in Mainz. It is a pleasure to acknowledge the friendliness with which Professor J. Mattauch and his whole staff accepted me at their institute.

I am also indebted to many colleagues both at Chalmers and at other universities for valuable discussions of different problems in

connection with this course of investigations and for communicating experimental results prior to publication.

Finally, I wish to acknowledge the skill and patience of Mr R. ELIASSON in making some 100 glass cells for these experiments.

References

A 1 F. W. Aston, Mass Spectra and Isotopes. 2nd Ed. London 1942.

A 2 G. Auerbach, Z. anorg. Chem. *28*, 41 (1901).

A 3 A. H. W. Aten, Z. physik. Chem. *73*, 578 (1910).

A 4 A. H. W. Aten, H. J. den Hertog and L. Westenberg, Trans. Am. Electrochem. Soc. *47*, 265 (1925).

A 5 W. D. Allen, Nature *168*, 451 (1951).

A 6 W. D. Allen, R. H. Dawton, M. L. Smith and P. C. Thonemann, Nature *175*, 101 (1955).

A 7 O. E. G. Almén, unpublished.

A 8 H. Akabori, Proc. Phys. — Math. Soc. Japan *23*, 599 (1941); Chem. Abstr. *36*, 333^7 (1942).

A 9 K. F. Alexander and R. Dreyer, Z. Naturforschg. *10a*, 1034 (1955).

A 10 F. C. Armistead and J. W. Beams, Phys. Rev. *57*, 359 (1940).

A 11 W. D. Allen, R. H. Dawton, J. M. Lock, A. B. Pippard, D. Shoenberg, M. Bär, K. Mendelssohn and J. L. Olsen, Nature *166*, 1071 (1950).

B 1 A. K. Brewer, S. L. Madorsky and J. W. Westhaver, Science *104*, 156 (1946).

B 2 A. K. Brewer, S. L. Madorsky et. al., J. Research Nat. Bur. Standards *38*, 137 (1947).

B 3 G. Breit and F. L. Friedman, J. Research Nat. Bur. Standards *39*, 397 (1947).

B 4 W. Biltz and W. Klemm, Z. anorg. allg. Chem. *152*, 267 (1926).

B 5 A. A. Botschwar, Z. anorg. allg. Chem. *210*, 163 (1933).

B 6 A. Bogorodski, J. russ. phys.-chem. Ges. *37*, 703 (1905); Chem. Zentr. *1905*:2, 954.

B 7 E. Berne and A. Klemm, Z. Naturforschg. *8a*, 400 (1953).

B 8 W. Bues, Z. anorg. allg. Chem. *279*, 104 (1955).

B 9 G. M. Begun and R. E. Allen, TID-3036 (Rev.) (1954).

B 10 G. P. Barnard, Modern Mass Spectroscopy, London 1953.

B 11 I. Bergström, S. Thulin, N. Svartholm and K. Siegbahn, Arkiv fysik *1*, 281 (1949).

B 12 R. Bernas, J. phys. radium *12*, 73 S (1951).

B 13 R. Bernas, J. phys. radium *14*, 34 (1953).

B 14 J. N. Brönsted and G. Hevesy, Nature *107*, 619 (1921).

B 15 P. Baertschi, W. Kuhn and H. Kuhn, Nature *171*, 1018 (1953).

B 16 J. W. Beams and F. B. Haynes, Phys. Rev. 50, 491 (1936).
J. W. Beams and A. V. Masket, Phys. Rev. *51*, 384 (1937).
C. Skarstrom, H. E. Carr and J. W. Beams, Phys. Rev. *55*, 591 (1939).
J. W. Beams and C. Skarstrom, Phys. Rev. *56*, 266 (1939).

B 17 W. A. Bell and L. O. Love, Y-628 (1950).

B 18 H. J. Buttram, L. O. Love and W. A. Bell, Y-671 (1950).

B 19 W. A. Bell, H. J. Buttram and L. O. Love, Y-692 (1950).

B 20 W. A. Bell and L. O. Love, Y-779 (1951).

B 21 H. J. Buttram, W. A. Bell and L. O. Love, Y-669 (1950).

B 22 A. K. Brewer and A. Bramley, U. S. Pat. 2258594, Oct 14, 1942, Chem. Abstr. *36*, 346^4 (1942).

B 23 R. Bernas and A. O. Nier, Rev. Sci. Instr. *19*, 895 (1948).

B 24 D. C. Bradley, Nature *173*, 260 (1954).

B 25 H. Brown, Phys. Rev. *57*, 242 (1940).

B 26 E. Bagge, unpublished; see [W 11].

B 27 H. Brennen, Compt. rend. *108*, 282 (1925).

C 1 A. E. Cameron, W. Herr, W. Herzog and A. Lundén, Z. Naturforschg. *11a*, 203 (1956).

C 2 M. Centnerswer and M. Blumenthal. Bull. intern. acad. polon. sci. Classe sci. math, nat. Sér. A *1936*, 470.

C 3 ibid. *1936*, 482.

C 4 M. Centnerszwer, J. chim. phys. *27*, 9 (1930).

C 5 A. E. Cameron, priv. com. through E. U. Monse.

C 6 A. E. Cameron and E. L. Lippert, Science *121*, 136 (1955).

C 7 C. A. Coulson, Valence. Oxford 1953.

C 8 G. Champetier and P. Regnaut, Bull. soc. chim. France (5) *4*, 592 (1937).

C 9 K. Clusius, priv. com.

C 10 K. Clusius and G. Dickel, Naturwiss. *27*, 148 (1939); *27*, 487 (1939); Z. physik. Chem. *B44*, 451 (1939).

C 11 L. G. Chelius and C. P. Keim, MDDC-1642; Phys. Rev. *73*, 813 (1948).

C 12 K. Clusius and F. Hitzig, Helv. Chim. Acta *33*, 506 (1950).

C 13 K. Clusius and E. R. Ramirez; Helv. Chim. Acta *36*, 1160 (1953).

C 14 M. Chemła, Compt. rend. *242*, 1450 (1956).

D 1 P. Drossbach, Elektrochemie geschmolzener Salze. Berlin 1938.

D 1a ibid. p. 135.

D 1b ibid. p. 75.

D 1c ibid. p. 136.

D 1d ibid. p. 94.

D 2 R. S. Dantuma, Z. anorg. allg. Chem. *175*, 1 (1928).

D 3 F. R. Duke, priv. com.

D 4 F. R. Duke and R. Laity, J. Am. Chem. Soc. *76*, 4046 (1954).

D 5 F. R. Duke and R. Laity, priv. com. to A. Klemm [K 31].

D 6 W. J. Davis, S. E. Rogers and A. R. Ubbelohde, Proc. Roy. Soc. (London) *A 220*, 14 (1953).

D 7 R. H. V. M .Dawton and M. L. Smith, Quart. Rev. (London) *9*, 1 (1955).
D 8 J. G. Dean, U. S. Patent 2,204,072, June 11 1940; Chem. Abstr. *34*, 6882^4 (1940).
D 9 P. Dutoit and K. V. Yacoubyan, Helv. Chim. Acta *22*, 805 (1939).
D 10 T. Dillon, R. Clarke and V. M. Hinchy, Sci. Proc. Roy. Dublin Soc. *17*, 53 (1922); Chem. Abstr. *16*, 4125 (1922).

E 1 A. Eilert, Verhandl. deut. physik. Ges. (3) *4*, 5 (1923).
E 2 W. Eitel and B. Lange, Z. anorg. allg. Chem. *171*, 168 (1928).
E 3 H. Ewald and. H. Hintenberger, Methoden und Anwendungen der Massenspektroskopie. Weinheim 1953.
E 4 A. Eucken and K. Bratzler, Z. physik. Chem. *A 174*, 269 (1935).
E 5 B. Elbek, B. S. Madsen and O. Nathan, Phil. Mag. (7) *46*, 663 (1955).
E 6 A. Egerton, Nature *110*, 773 (1923).
A. Egerton and W. Lee, Proc. Roy. Soc. (London) *A 103*, 499 (1923).
E 7 M. L. Eidinoff, J. Chem. Phys. *15*, 527 (1947).

F 1 S. Floberg, A. Klemm and C. Lang, Z. Naturforschg. *8a*, 562 (1953).
F 2 H. Freundlich, Kapillarchemie Vol. 1 p. 30, 32—34. Leipzig 1930.
F 2a ibid. p. 347.
F 2b ibid. p. 339.
F 3 H. Fischmeister, to be published.
F 4 H. Fischmeister, to be published.
F 5 H. Fischmeister, Arkiv Fysik, in press.
F 6 A. Fournier, Compt. rend. *215*, 529 (1942).

G 1 Gmelins Handbuch der Anorganischen Chemie. 8th Ed. *20*, 121 & 172 (1927).
G 2 ibid. *27 B*, 111—112 (1939).
G 3 ibid. *36*, 75 (1936).
G 4 E. Glueckauf, K. H. Barker and G. P. Kitt, Disc. Faraday Soc. *7*, 199 (1949).
G 5 J. H. Gross, AECD-2952 (1950).
G 6 H. G. Grimm and L. Braun, Z. physik. Chem. *B 2*, 200 (1929).
G 7 H. G. Grimm, Z. physik. Chem. *B 2*, 181 (1929).

H 1 W. Herzog, unpublished.
H 2 W. Herzog, priv. com.
H 3 J. I. Hoover and C. E. Holloway, NRL-3897 (1951).
H 4 Handbook of Chemistry and Physics. 30th Ed p. 1749 & 1751. Cleveland 1947.
H 5 G. v. Hevesy, Jahrb. Radioakt. u. Elektronik *13*, 282 (1916).
H 6 W. Herr and A. Klemm, Z. Naturforschg. in press.
H 7 B. S. Harrap and E. Heymann, Chem. Rev. *48*, 45 (1951).
H 8 N. B. Hannay and C. P. Smyth, J. Am. Chem. Soc. *68*, 171 (1946).
H 9 L. Holleck, Z. Elektrochem. *44*, 111 (1938).
H 10 W. D. Harkins, Nature *105*, 230 (1920); *108*, 209 (1921); Science *51*, 289 (1920); *54*, 359 (1921); Proc. Nat. Acad. Sci. U. S. *11*, 624 (1925).

W. D. Harkins and A. Hayes, J. Am. Chem. Soc. *43*, 1803 (1921); Phys. Rev. *19*, 403 (1922).
W. D. Harkins and F. A. Jenkins, J. Am. Chem. Soc. *48*, 58 (1926).
W. D. Harkins and C. E. Broecker, Z. Physik *50*, 537 (1928).
H 11 H. J. Henriques and R. E. Cornish, J. Phys. Chem. *37*, 397 (1933).
H 12 H. Hartley, A. O. Ponder, E. J. Bowen and T. R. Merton, Phil. Mag. (6) *43*, 430 (1922).
H 13 D. A. Hutchison, J. Phys. Chem. *13*, 536 (1945).
H 14 ibid. *14*, 401 (1946).
H 15 W. Hampe, Chem. Ztg *11*, 1109 (1887).
H 16 R. F. Humphreys, Phys. Rev. *55*, 674 (1939).
H 17 A. Hemmendinger and W. R. Smythe, Phys. Rev. *51*, 1052 (1937).
H 18 O. Hönigschmid and M. Steinheil, Ber. deut. chem. Ges. *56 B*, 1831 (1923).
H 19 G. v. Hevesy and M. Løgstrup, Z. anorg. allg. Chem. *171*, 1 (1928).
H 20 L. Holleck, Z. Physik *116*, 624 (1940).

J 1 E. R. Jette, Phil. Mag. (7) *3*, 258 (1927).
J 2 P. W. M. Jacobs and F. C. Tompkins, Quart. Rev. (London) *6*, 238 (1952).
J 3 H. L. Johnston and C. A. Hutchison, J. Chem. Phys. *8*, 869 (1940).
J 4 W. Jach, Diss. Kiel 1951.
J 5 H. L. Johnston and D. A. Hutchison, J. Chem. Phys. *10*, 469 (1942).
J 6 J. Joly and J. H. J. Poole, Phil. Mag. (6) *39*, 372 (1920).
J 7 A. G. Jacques, J. Gen. Physiol. *23*, 741 (1940); Chem. Abstr. *34*, 7736^9 (1940).
J 8 F. A. Jenkins, Abstracts of Thesis, Univ. Chicago, Science Series *4*, 93 (1925—26); Chem. Abstr. *22*, 3827 (1928).

K 1 J. Kendall and E. D. Crittenden, Proc. Nat. Acad. Sci. U. S. *9*, 75 (1923).
K 2 J. Kendall, Phys. Rev. *21*, 389 (1923).
K 3 J. Kendall and J. F. White, Proc. Nat. Acad. Sci. U. S. *10*, 458 (1924).
K 4 J. Kendall and B. L. Clarke, Proc. Nat. Acad. Sci. *11*, 393 (1925).
K 5 J. Kendall, Proc. Roy. Phil. Soc. Glasgow *59*, 1 (1931); Chem. Abstr. *26*, 3448^5 (1932).
K 6 J. Kendall, E. R. Jette and W. West, J. Am. Chem. Soc. *48*, 3114 (1926).
K 7 J. Kendall and W. West, J. Am. Chem. Soc. *48*, 2619 (1926).
K 8 J. Kendall, Science *67*, 162 (1928).
K 9 J. Kendall, Proc. Roy. Soc. Edinburgh *57*, 182 (1937).
K 10 J. Kendall, Nature *150*, 136 (1942).
K 11 A. Klemm, Naturwiss. *32*, 69 (1944).
K 12 A. Klemm, Z. Naturforschg. *2a*, 9 (1947).
K 13 A. Klemm, H. Hintenberger and P. Hoernes, Z. Naturforschg. *2a*, 245 (1947).
K 14 A. Klemm, H. Hintenberger and W. Seelmann-Eggebert, Z. Naturforschg. *3a*, 172 (1948).

K 15 A. Klemm, H. Hintenberger and W. Seelmann-Eggebert, Z. Naturforschg. *3a*, 622 (1948).

K 16 A. Klemm, H. Hintenberger and A. Lundén, Z. Naturforschg. *6a*, 489 (1951).

K 17 A. Klemm, E. Lindholm and A. Lundén, Z. Naturforschg. *7a*, 560 (1952).

K 18 A. Klemm and A. Lundén, Z. Naturforschg. *10a*, 282 (1955).

K 19 A. Klemm, Z. Naturforschg. *6a*, 512 (1951).

K 20 A. Klemm, Z. Physik, *123*, 10 (1944).

K 21 A. Klemm, Z. Naturforschg. *1*, 252 (1946).

K 22 A. Klemm, Z. Naturforschg. *3a*, 211 (1948).

K 23 A. Klemm, Z. Naturforschg. *7a*, 417 (1952).

K 24 A. Klemm, Z. Elektrochem. *58*, 609 (1954).

K 25 A. Klemm, Z. physik. Chem. *193*, 29 (1943).

K 26 A. Klemm, Z. Naturforschg. *6a*, 487 (1951).

K 27 A. Klemm, Z. Naturforschg. *8a*, 397 (1953).

K 28 G. Kortüm and J. O'M. Bockris, Textbook of electrochemistry Vol. II, p. 472. Amsterdam 1951.

K 29 S. Karpatschoff and O. Poltoratska, J. Phys. Chem. *40*, 763 (1936).

K 30 W. J. Kroll, Trans. Electrochem. Soc. *87*, 551 (1945).

K 31 A. Klemm, Vortragssammlung Physikertag 1955, in press. (Physik-Verlag Mosbach 1956).

K 32 C. P. Keim, Nucleonics *9*, 2, 5 (Feb. 1951); *10*, 8, 29 (Aug. 1952); Chem. Eng. News *25*, 2624 (1947); J. Appl. Phys. *24*, 1255 (1953); Nature *175*, 98 (1955); Proc. 1955 Harwell Isotope Conf., Chapter 18.

K 33 J. Kendall, J. Am. Chem. Soc. *55*, 2612 (1933).

K 34 A. Z. Kranz and W. W. Watson, Phys. Rev. *91*, 1469 (1953).

K 35 W. Kuhn and H. Martin, Naturwiss. *20*, 772 (1932); Z. physik. Chem. *B21*, 93 (1933).

K 36 H. Korsching and K. Wirtz, Abhandl. preuss. Akad. Wiss. Math.-naturwiss. Kl. *1939*, Nr 3; Naturwiss. *27*, 367 (1939).

K 37 J. Koch and B. Bendt-Nielsen, Kgl. Danske Videnskab. Selskab, Math.-fys. Medd. *21*, No. 8 (1944).

K 38 C. P. Keim, H. W. Savage and B. Weaver, Y-640 (1950).

K 39 W. Kuhn, H. Martin and K. H. Eldau, Z. physik. Chem. *B50*, 213 (1941).

K 40 A. Klemm, priv. com.

L 1 F. A. Lindemann, Proc. Roy. Soc. *99A*, 102 (1921).

L 2 A. Lundén, E. U. Monse and N. G. Sjöberg, Z. Naturforschg. *11a*, 75 (1956).

L 3 A. Lundén, C. Reuterswärd and N. G. Sjöberg, Z. Naturforschg. *10a*, 279 (1955).

L 4 A. Lundén, G. Horlitz and P. Signer, Z. Naturforschg., in press.

L 5 A. Lundén and E. Berne, Z. Naturforschg. *9a*, 684 (1954).

L 6 A. Lundén, submitted to Z. Naturforschg.

L 7 A. Lundén, submitted to Z. Naturforschg.

L 8 R. Lorenz, Die Elektrolyse geschmolzener Salze. Halle 1905.

L 8a ibid. Vol. 1 p. 130.

L 8b ibid. Vol. 1 p. 128.

L 9 R. Lorenz and F. Kaufler, Handbuch der angew. physik. Chem. Vol 11:I. Leipzig 1909.

L 10 R. Lorenz, Z. anorg. Chem. *10*, 81 (1895).

L 10a ibid. *10*, 91 (1895).

L 11 Landolt-Börnstein, Physikalisch-Chemische Tabellen 5th Ed. Berlin 1923—1936.

L 11a ibid. Eg. IIIc, p. 2219.

L 12 R. Lorenz and W. Eitel, Pyrosole. (Kolloidforschung in Einzeldarstellungen Vol. 4) Leipzig 1926.

L 12a ibid. p. 74.

L 13 Landolt-Börnstein: Zahlenwerte und Funktionen. 6th Ed. Berlin 1956. Vol. II:3, p. 10.

L 14 ibid. Vol. II:3, p. 50.

L 14a ibid. Vol. II:3, p. 52.

L 15 ibid. Vol. I:4.

L 16 A. Lodding. A, Lundén and H. v. Ubisch, Z. Naturforschg. *11a*, 139 (1956).

L 17 K. Lark-Horovitz and E. P. Miller, Phys. Rev. *49*, 418 (1936).

L 18 G. N. Lewis and R. T. Macdonald, J. Am. Chem. Soc. *58*, 2519 (1936).

L 19 E. B. Ludlam, Proc. Cambridge Phil. Soc. *21*, II, 45 (1922).

L 20 T. Langvad, Acta Chem. Scand. *8*, 526 (1954).

L 21 L. O. Love and W. A. Bell, Y-623 (1950).

L 22 A. Lundén, C. Reuterswärd and A. Lodding, Z. Naturforschg. *10a*, 924 (1955).

L 23 R. Lindner, Z. Naturforschg. *9a*, 798 (1954).

L 24 L. O. Love, W. A. Bell and H. J. Buttram, Y-693. (1950).

L 25 A. W. Laubengayer and F. B. Schirmer, J. Am. Chem. Soc. *62*, 1578 (1940).

L 26 A. Lundén, unpublished.

L 27 L. O. Love and W. A. Bell, AECD-3502.

M 1 S. L. Madorsky and S. Straus, J. Research Nat. Bur. Standards *38*, 185 (1947).

M 2 ibid. *41*, 41 (1948).

M 3 M. Mason and W. Weaver, Phys. Rev. *23*, 424 (1924).

M 4 S. D. Majumdar, Phys. Rev. *81*, 844 (1951).

M 5 C. L. Mantell, Industrial Electrochemistry. 3rd Ed. p. 28. New York 1950.

M 6 I. Z. Moltkehansen, Handbuch d. techn. Elektrochem. Vol. III, p. 90. Leipzig 1934.

M 7 F. R. Meyer and G. Ronge, Z. angew. Chem. *52*, 637 (1939).

M 8 E. U. Monse, priv. com.

M 9 E. Murmann, Österr. Chem.-Ztg. *26*, 14 (1923); Chem. Abstr. *17*, 1375^2 (1923); Chem. Zentr. *1923*, I, 1146.

M 10 G. W. Murphy, ANL-5104 (1953).

M 11 M. Morand, Ann. phys. (10) *7*, 103 (1927).

M 12 H. Martin, Z. Naturforschg. *4a*, 28 (1949).

M 13 H. Martin, priv. com.

M 14 H. Martin and E. Ruhtz, Z. Elektrochem. *54*, 560 (1950).

M 15 E. A. Martell and W. F. Libby, Phys. Rev. *80*, 981 (1950).

M 16 E. Maxwell, Phys. Rev. *86*, 235 (1952).

M 17 R. Martin and W. Walcher, Marburger Sitzungsber. *75*, 5 (1952).

M 18 O. Menge, Z. anorg. allg. Chem. *72*, 199 (1911).

N 1 K. O. Nielsen, Proc. 1955 Harwell Isotope Conf. Chapter 9.

N 2 T. Nishimura and T. Toyama, Bull. Inst. Phys. Chem. Research (Tokyo) *7*, 98 (1928); Chem. Abstr. *22*, 3348^1 (1928).

N 3 G. Nief and E. Roth, Compt. rend. *239*, 162 (1954).

N 4 T. Nishimura, T. Yamamoto and M. Arai, Bull. Inst. Phys. Chem. Research (Tokyo) *7*, 237 (1928); Chem. Abstr. *22*, 3348^2 (1928).

O 1 M. L. Oliphant, E. S. Shire and B. M. Crowther, Proc. Roy. Soc. (London) *A 146*, 922 (1934); Nature *133*, 377 (1934).

O 2 W. J. C. Orr, Trans. Faraday Soc. *37*, 587 (1941).

O 3 O. Osberghaus, Proc. 1955 Harwell Isotope Conf. Chapter 28.

P 1 J. E. G. Pilley, Phil. Mag. (6) *49*, 889 (1925).

P 2 L. Pauling, The Nature of the Chemical Bond. 2nd Ed. Ithaca 1945.

P 3 W. Paul and M. Raether, Z. Physik *140*, 262 (1955).

R 1 E. H. Riesenfeld, Lehrbuch der Anorganischen Chemie. 3rd Ed. Zürich 1943. p. 659.

R 2 J. Rasch, Diss. Mainz 1952; see [K 17].

R 3 L. H. Rumbaugh, Phys. Rev. *49*, 882 (1936)
L. H. Rumbaugh and L. R. Hafstad, Phys. Rev. *50*, 681 (1936).

R 4 P. Renaud, Compt. rend. *236*, 1555 (1953).

R 5 D. H. Rank and R. E. Kagarise, Nature *168*, 740 (1951).

R 6 P. L. Robinson and H. V. A. Briscoe, J. Chem. Soc. *127*, 138 (1925).

R 7 E. R. Ramirez, J. Am. Chem. Soc. *76*, 6237 (1954).

R 8 F. A. Rohrman, W. J. Utlaut and I. Ceresna, Contract AF (600) 440 Amended.

R 9 T. W. Richards and N. F. Hall, J. Am. Chem. Soc. *39*, 531 (1917).

R 10 T. W. Richards, H. S. King and L. P. Hall, J. Am. Chem. Soc. *48*, 1530 (1926).

S 1 G. Schulze, Z. Elektrochem. *17*, 509 (1911); Ann. Physik (4) *37*, 435 (1912).

S 2 O. J. Stewart and D. W. Young, J. Am. Chem. Soc. *57*, 695 (1935).

S 3 B. Siede, Glas u. App. *18*, 163 (1937); Chem. Abstr. *32*, 2699^3 (1938).

S 4 H. v. Steinwehr, Handb. d. techn. Elektrochem. Vol. III, p. 10. Leipzig 1934.

S 5 ibid. p. 17.

S 6 K. E. Schwarz, Elektrolytische Wanderung in flüssigen und festen Metallen. Leipzig 1940. p. 17.

S 7 J. C. Slater, Introduction to Chemical Physics. New York 1939. p. 256.

S 8 W. P. Senett, et. al. NYO-625 (1952); NYO-6239 (1953).

S 9 W. R. Smythe, L. H. Rumbaugh and S. S. West, Phys. Rev. *45*, 724 (1934).

S 10 E. F. Shader, Phys. Rev. *69*, 439 (1946).

S 11 H. Steinwedel, Die Chemie *55*, 152 (1942).

S 12 D. F. Stedman, Can. J. Research *13 B*, 114 (1935).

S 13 J. Sameshima, K. Aihara and T. Shirai, J. Chem. Soc. Japan *43*, 761 (1922); Sci. Repts. Tohoku Imp. Univ. *12*, 149 (1923); Chem. Abstr. *17*, 923^4 & 2990^5 (1923).

S 14 W. R. Smythe and A. Hemmendinger, Phys. Rev. *51*, 146 & 178 (1937).

S 15 R. Sherr, J. Chem. Phys. *6*, 251 (1938).

S 16 A. A. Sunier, Abstracts of Theses. Univ. Chicago Science Series *4*, 173 (1925—26); Chem. Abstr. *22*, 3826 (1928).

S 17 B. Serin, C. A. Reynolds and C. Lohman, Phys. Rev. *86*, 162 (1952).

S 18 F. H. Spedding, Disc. Faraday Soc. *7*, 214 (1949).

T 1 J. J. Thomson, Rays of Positive Electricity and their Application to Chemical Analyses. London 1913.

T 2 C. Tubandt, H. Reinhold and G. Liebold, Z. anorg. allg. Chem. *197*, 225 (1931). C. Tubandt, Handb. d. Experimentalphysik. Vol. XII:1 p. 381. Leipzig 1932.

T 3 S. Thulin, Arkiv Fysik *9*, 134 (1954).

T 4 T. I. Taylor and H. C. Urey, J. Chem. Phys. *5*, 597 (1937).

T 5 ibid. *6*, 429 (1938).

T 6 T. I. Taylor, Science *89*, 176 (1939).

T 7 F. P. Treadwell and W. T. Hall, Analytical Chemistry. 9th Ed. Vol. II. p. 300. New York 1945.

U 1 H. C. Urey, A. Mills, I. Roberts, H. G. Thode and J. R. Huffman, J. Chem. Phys. *7*, 138 (1939).

U 2 H. C. Urey, J. Chem. Soc. *1947*, 562.

V 1 B. L. Vanzetti, Gazz. chim. ital. *54*, 89 (1924); Chem. Abstr. *18*, 2283^1 (1924).

W 1 W. Walcher, Ergeb. exakt. Naturwiss. *18*, 155 (1939).

W 2 J. W. Westhaver, J. Research Nat. Bur. Standards *38*, 169 (1947).

W 3 H. Wänke and E. U. Monse, Z. Naturforschg. *10a*, 667 (1955).

W 4 A. F. Wells, Structural Inorganic Chemistry. 1st Ed. Oxford 1945.

W 5 G. Wagner, A. Pelz and M. J. Higatsberger, Monatsh. Chemie *85*, 464 (1954).

W 6 W. Whaling and J. E. Evans, Phys. Rev. *73*, 648 (1948).

W 7 C. W. Williamson, SO-3252; 3253 (1953).

W 8 S. Wagner, Z. Physik *141*, 122 (1955).

W 9 W. Walcher, Z. Physik *108*, 376 (1938).

W 10 ibid. *122*, 401 (1944).

W 10a ibid. *122*, 62 (1944).
W 11 W. Walcher, FIAT Review Nuclear Physics Part 2, 94 (1948).
W 12 B. Weaver, Proc. 1955 Harwell Isotope Conf. Chapter 10.
W 13 B. Weaver, Y-639 (1950).

Y 1 E. Yatabe and D. F. Stedman, C-69-48S. (1948).
Y 2 E. L. Yates, Proc. Roy. Soc. (London) *A 168*, 148 (1938).
Y 3 N. Yamamuro, J. Phys. Soc. Japan *6*, 411 (1951).
Y 4 K. V. Yacoubyan, Helv. Chim. Acta *22*, 808 (1939).

Z 1 C. J. Zilverschoon, Thesis Amsterdam 1954.
Z 2 S. Żemcużnży and F. Rambach, Z. anorg. allg. Chem. *65*, 403 (1910).

Pris kr. 12: —

CHALMERS TEKNISKA HÖGSKOLAS BIBLIOTEK
15 JUN 1956
GÖTEBORG