CHALMERS
UNIVERSITY OF TECHNOLOGY

A framework concept for data visualization and structuring in a complex production process

Downloaded from: https://research.chalmers.se, 2026-02-14 10:25 UTC

Citation for the original published paper (version of record):
Albo, A., Bengtsson, K., Dahl, M. et al (2019). A framework concept for data visualization and structuring in a complex production process. Procedia Manufacturing, 38: 1642-1651.
http://dx.doi.org/10.1016/j.promfg.2020.01.120

N.B. When citing this work, cite the original published paper.

research.chalmers.se offers the possibility of retrieving research publications produced at Chalmers University of Technology. It covers all kind of research output: articles, dissertations, conference papers, reports etc. since 2004. research.chalmers.se is administrated and maintained by Chalmers Library

(article starts on next page)

Available online at www.sciencedirect.com

ScienceDirect

Procedia Manufacturing 38 (2019) 1642–1651

Procedia MANUFACTURING

www.elsevier.com/locate/procedia

29th International Conference on Flexible Automation and Intelligent Manufacturing (FAIM2019), June 24-28, 2019, Limerick, Ireland.

A framework concept for data visualization and structuring in a complex production process

Anton Albo[a,b]*, Kristofer Bengtsson[a], Martin Dahl[a], Petter Falkman[a]

Department of Electrical Engineering, Chalmers University of Technology, Gothenburg 41296, Sweden
Department of Facillity, Tool & Equipment Paint, Volvo Cars Torslanda, Gothenburg 40531, Sweden

Abstract

This paper provides a concept study for a visual interface framework together with the software Sequence Planner for implementation on a complex industrial process for extracting process information in an efficient way and how to make use of a lot of data to visualize it in a standardized human machine interface for different user perspectives. The concept is tested and validated on a smaller simulation of a paint booth with several interconnected and supporting control systems to prove the functionality and usefulness in this kind of production system.

The paper presents the resulting five abstraction levels in the framework concept, from a production top view down to the signal exchange between the different resources in one production cell, together with additional features. The simulation proves the setup with Sequence Planner and the visual interface to work by extract and present process data from a running sequence.

© 2019 The Authors. Published by Elsevier B.V.
This is an open access article under the CC BY-NC-ND license (http://creativecommons.org/licenses/by-nc-nd/4.0/)
Peer-review under responsibility of the scientific committee of the Flexible Automation and Intelligent Manufacturing 2019 (FAIM 2019)

Keywords: modeling; simulation; visualization; control systems; data extraction; framework; abstraction levels

1. Introduction

The automotive industry, or industry in general, is today elaborating much around the concepts of Internet of Things, Industry 4.0 and Smart Factory, where machines, equipment and components are to an increasingly extend

* Corresponding author. Tel.: +46738604744.
E-mail address: anton.albo@chalmers.se

2351-9789 © 2019 The Authors. Published by Elsevier B.V.
This is an open access article under the CC BY-NC-ND license (http://creativecommons.org/licenses/by-nc-nd/4.0/)
Peer-review under responsibility of the scientific committee of the Flexible Automation and Intelligent Manufacturing 2019 (FAIM 2019)
10.1016/j.promfg.2020.01.120

connected to a virtual cloud where information and process data are uploaded and more easily accessed for a broader use of additional analysis tools and applications [1], [2].

This predicted industrial revolution puts high demands on the component manufacturers and vendors to meet the requirement on functionality to communicate to the cloud applications in a common, standardized language [3].

With more advanced functions, the complexity will increase when more difficult tasks need to be solved and with an increasingly number of units that send even more information to the cloud [4]. The main challenge will then be to solve how all this process data should be used to improve the production rate and the overall performance, but also how it should be visualized for operators, technicians and management to understand what is happening during the daily production [5].

The paint process in an automotive industry is a vital part for achieving the right product quality [6]. It is also a difficult process to follow and control, due to a lot of interconnected and supporting control systems which is necessary to carry out the complex task of achieving a high paint quality for the final product in a highly sensitive work environment [7].

Figure 1a shows a brief overview of a paint shop at Volvo Cars in Torslanda, Sweden, starting from the surface pre-treatment area with phosphate and electrolyte bath followed by sealing before the first primer color station. The actual color of the car is applied in the basecoat and preserved in the clearcoat. Each of the application areas has a subsequently oven or dryer for the best result and product quality.

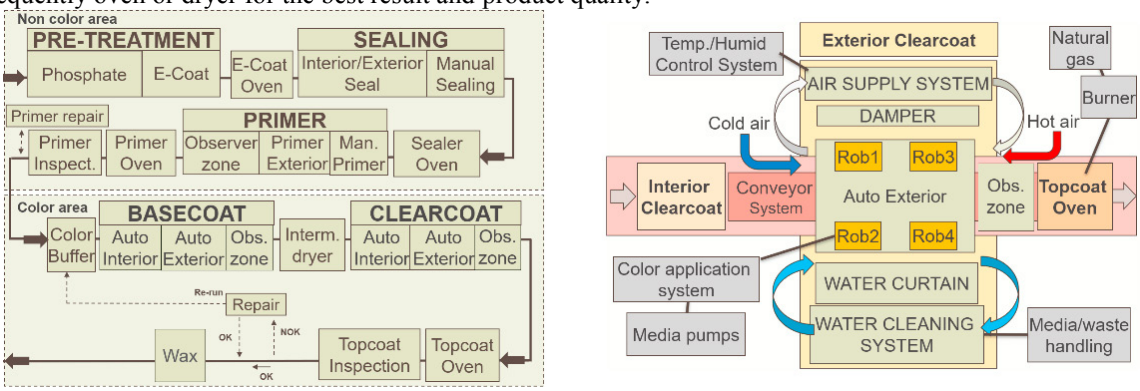

Fig. 1. (a) A simplified flowchart of a paint shop, where all white car bodies follow through the different stations in the process line starting; (b) An illustration of the complex dynamics in a clearcoat station with the interconnected systems that are dependent on each other.

The complexity in a paint shop is primarily the number of different systems that interact in or of many different stations, where several components are included such as spray paint application robots, transport systems, media systems for paint and solvent, process air, ovens and waste handling [8], which all controls different equipment with discrete and dynamic parameters to complete the task. An illustration of this is shown in Figure 1b.

Virtual production preparation and commissioning approaches of these complex systems has not yet been invested in. The main reason is that the complexity makes it hard and time consuming to model all different dependencies between systems [8].

Virtual commissioning (VC) is a concept concerning the visualization and modeling of production systems in 3D environments for validating PLC code, operation sequences and construction to name a few [9], [10]. This method can save a lot of time and money since it reduces the physical commissioning time [11], but with even more complex production system, modeling becomes even tougher and more time consuming due to the level of parameters and several interconnected systems [12].

This paper presents a concept for modeling and visualization of several dependent and independent control systems working simultaneously in a complex paint booth process. It is shown how the framework concept has been tested on a smaller simulated model of the paint booth using the software Sequence Planner to simulate and collect information which is visualized in the framework to prove its functionality in a complex environment. The framework results in five abstraction levels with visual interfaces for different user of interest and a how it can be implemented on a physical system.

2. Preliminaries

In the following section, a brief background of the paint process is described as well as the theory behind modeling and simulation of complex dynamic used in this paper.

2.1. The complexity in a paint shop

The paint application procedure in an automotive industry is a sensitive process that aims to achieve the right product quality and at the same time reduce process cycle time and material waste [6], [13]. A paint plant consists of several different treatment station in a specific order, as seen in Figure 1a, and every station has its own dependencies with different supporting and interconnecting systems to carry out the complex task [7].

The complexity in a paint shop is primarily the number of different systems that interact in one station, e.g. the paint booth, where the color is applied on the car body. One of the paint booths station, exterior clearcoat, as illustrated in Figure 1b, has several components included such as spray paint application robots provided with integrated paint and solvent media system and a conveyor system to transport the car body through the booth.

To get the right environmental working condition for the paint, process air is circulated in the booth, controlling both temperature and humidity [14]. To handle the waste from the spray paint system, water curtains is sweeping under the robots to collect paint particles and separate it from the water in another supporting system. The water will on the other hand interfere with temperature and humidity in the booth which the air supply system needs to compensate for.

The clearcoat station is designed as a tunnel, sealed from the operators, to reduce dirt to get in and cause quality issues. A conveyor system transports all the car bodies through the tunnel which will communicate to several stations to make the performance time efficient and safe.

At the end of the paint booth is an oven to make the wet paint to dry faster, but the working temperature of 300°C from the oven will also affect the booth temperature and make the air supply system to compensate even more [8].

Due to all interfering and interconnected systems with a mixed of discrete and dynamic constraints, the level of complexity is much higher in a paint process industry than in a manufacturing production industry or an assembly line [7]. When investing in complete solution from supplier, or by partially upgrade or exchange the equipment, a complex paint plant can be a tough challenge for implementations as processes and surrounding systems are highly integrated with each other and with a lot of dependencies between the interconnected systems. A plant is therefore created to have a life span of 20-30 years, which then implies a major investment for the company [15].

It is of highest interest and importance for a company to make detailed requirements specifications to have an implementation standard for minor future changes or upgrades of different systems since it will be a lot of requirements to fit the highly integrated process.

2.2. Extraction of process data and utilization of information

The technical development after the industrial revolution, Industry 4.0 and Internet of things, advanced digitalization within factories and more future-oriented technologies in the smart factory concept [16] has created a paradigm shift in industrial production [17]. Future production systems, or cyber-physical system, aims to where all equipment is connected and online for gathering knowledge of a process with all information and data accessible in a virtual cloud architecture [18], [19].

The concept of collecting information for discrete event operations with continuous dynamics in low-level control systems (PLC) has been tested for applying high-level knowledge for more flexible systems for optimization and decision-making in a standardized architecture [20], [21].

With a big data environment, process information can be analyzed at any time and information about the production progress can be more intuitive. Instead of only statistical assumption used for preventive maintenance, algorithms using high-level knowledge for predictive maintenance can be applied for better error prediction or production efficiency as in [22].

To make the knowledge from a virtual cloud of process information even more intuitive, systems and production equipment can make use of visual interfaces for operators or management, also known as HMI (Human Machine Interface) [23].

2.3. Modeling and simulation of complex dynamics

With modern technology and global growth in the automation industry, different applications for modeling and visualization of a complex production systems has been made with different focus and in several different way.

In order to design and improve these complex systems, it may be advantageous to use theoretical models for testing and analysis in simulation to see how the system behaves. A formal approach in control systems is highly useful due to verification and validation procedures which includes static and dynamic properties [24], [25].

Sequence Planner (SP), is a modeling and analysis tool of operation sequences, developed with functional programming and can be used as a high-level control system by listening to input from formal representations of product properties and process operations. The obtained information can then be translated into a formal graphical language for sequences of operations to control and analyze extracted data and gives support for additional applications and features as optimization [25] or scheduling of discrete events [26].

2.4. Virtual preparation and commissioning of production systems

Virtual commissioning (VC) is a concept concerning the visualization, programming and validation of a production system in a virtual environment. This is either used as a preparational step for the construction of new manufacturing plants to reduce the physical commissioning time, or to make changes in an existing production cell [9], [10].

With simulation software together with 3D-CAD drawings, models applied with dynamic properties is created and connected in a hardware or software-in-loop configuration with a PLC, where the actual control logic can be tested for a that specific production system [27].

The model is shown in 3D which gives an extra dimension of understanding on how a system operates and with the addition to modern virtual reality equipment even give a more realistic and hands on experience of the virtual model [28].

VC can save a lot of time and money since it reduces the actual commissioning even if modeling can be time consuming with higher level of details [11]. A VC approach can for more complex solutions with several interconnected system and applications be hard to realize in a simulation due to very type-specific equipment, e.g. supplier interfaces or vision cameras [12].

3. Experimental setup

This section will present the hardware setup and software configuration used for this simulation example.

3.1. The Control Tower Hierarchy

Sequence Planner (SP), is a tool for modeling and analysis of operation sequences and can be used for high-level control or as a detailed scheduling system.

The advantages of SP as a control system are:

- Mathematically guarantee of functional and safety requirements using formal methods
- Optimization of operation sequences
- Flexible control structures of operation sequences instead of hard coded sequences
- Autonomous and collaborative systems control
- Handling variability of products and operations

The control solution in SP is divided into two main parts. One that handles the low-level control, called the Virtual Device (VD) and one that is handling the operations. By using formal methods, resources are defined in order to imitate the properties of each specific equipment it will listen to, e.g. a robot, conveyor or pump motor.

A VD can then join multiple resources and their abilities into one logical entity that manages the communication in the driver segment to connect to the rest of SP which will act as a simulation, where the VD's driver segment listens to a Scala script imitating physical entities to describe the dynamic behavior of the paint booth different resources.

The three layers of a VD together with some of the features in SP's control hierarchy is shown in Figure 2a as a part of the complete setup for this example.

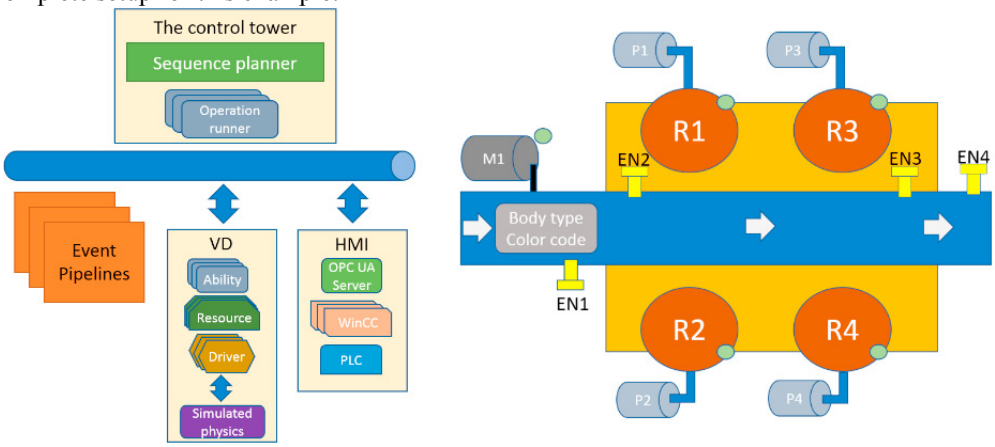

Fig. 2. (a) An illustration of how the experimental setup is using Sequence Planner and the developed HMI connected to the virtual service bus; (b) A simplified illustration of the main components in the constructed concept model.

3.2. *Human machine interface using WinCC*

The visual interface is created in WinCC Runtime Advance, integrated in Siemens TIA-Portal V13 for PLC applications which is commonly used in industries globally. A simulated PLC is implemented to the HMI project using S7-PLCSim V13 to handle the visual HMI-logic and do not interfere with the logic from the simulation. In addition, the PLC read and log information and events in the running simulation in SP through the HMI for analysis purpose.

By using WinCC, a complete functional OPC UA server is configured at the work station computer to have a standardized signal exchange between the visual interface and a running process in SP. OPC UA is an established technique with a standardized protocol to transmit signals between different clients over Ethernet. SP has already support for OPC UA communication as a client using the same protocol.

3.3. *Complete setup of the simulated model with human machine interface*

For the complete setup, seen in Figure 2a, the hierarchy in SP to construct a simplified model of a paint booth with additional physics dynamics to run the simulation. The communication solution is implemented with SP as an OPC UA client.

The developed human machine interface in WinCC is configured with a fully functional OPC UA server to be able to show and illustrate the extracted information and events occurring in the simulation as a proof of concept for visualizing complex process sequences.

4. The simulated concept model with running visual framework

This section will describe how the concept model is constructed using the setup described in Section 3 and how the human machine interface is designed to make use of the data in order to visualize the running simulated process.

4.1. Defined resources and properties

The concept model, see Figure 2b, is simplified and reduced in size compared with the process in Figure 1b. The concept model will focus on the signal exchange and data extraction from the model framework in SP and not the complexity of each different resources. The modeled paint booth in Figure 2b, contains; 1 conveyor for transport of car bodies; 4 spray paint robots; 4 paint media supply pumps; 10 white car bodies in a buffer.

All components have properties as sensors, length/size and physical placement. The car bodies are not defined as resources but instead modelled as dynamic variables for keeping track of the product data for each car with additional information as body type and color code.

A resource has drivers that listens to simulated dynamic variables, e.g. pressure (bar) for the media pumps. Time perception is also defined and specified for all resources that operate under certain time frames, since time often is not included in event-based modeling. This is also the case for SP since SP normally uses drivers to connect to actual sensors from a physical system in real-time.

The different resources are defined with abilities in the Ability segment in VD as; Robot: program number (int), home position, start, stop; Conveyor: start, stop, zones (int), presence sensors; Pumps: pressure sensor (bar), start, stop.

The abilities include specific functionality as programs, modes and operations. The robots have several time dependent programs, while the conveyor has a fixed velocity and the pumps has two modes; pressurize and depressurize.

4.2. Running sequences and plant definition

Sequence Planner connects the resources and creates operations, based on the abilities each resource has, in order to generate a sequence flowchart for the paint booth. The different operations constructed by SP are; *call_newbody, start_robotprog, start_conveyor, stop_conveyor, start_pressurize* and *stop_pressurize*.

The intentional sequence for the paint booth, based on the operation listed above, will by pressing a start button in the visual interface, initiate call_body and start_conveyor to send a car body to the first presence sensor. When the sensor detects a positive edge, the media supply pumps will activate and start pressurizing.

After the pressure sensor reaches 15 bar and the car body has proceed in to the painting zone in the booth, the robots run the right color code program for 10 seconds. When completed, the pumps start depressurizing back to 0 bar. After the body has left the booth and triggered the last presence sensor at the conveyor, the sequence repeats itself by calling for a new body. This is done for all 10 bodies before the buffer is empty and the conveyor stops.

The defined resources with their abilities and drivers are coded into Scala-scripts, compiled in SBT, a build in Scala compiler for Windows through the command prompt (cmd). The information in the “Ability” segment in VD is extracted by SP’s supporting browser widgets “ModelsWidget”, “VDTracker” and “Ability Handler” to show which operation is currently executing.

The command prompt is used to monitor all data collected like a virtual event pipeline or bus. The PLC is used for logging and analysing this sequence data going through the HMI to show how the event pipeline can be of used for external applications.

4.3. Applying a visual framework concept in simulation

The information from the running simulation is now reachable for other clients on the shared event pipeline. To make it visual and easy to comprehend, a constructed visual framework is applied, consisting of different abstraction levels, 4 visual interfaces and 1 non-visual.

The abstraction levels in the framework, illustrated in Figure 3a, starts from a top view with complete overview of the whole paint shop, followed by the different line views to group geographically connected systems. A line area contains several operations, or cells, which shows the booth operation for this example, followed by each of one cell resources. The fundamental signal exchange between all resources on the virtual event bus is represented as the bit view. Each abstraction level has an intentional user to show suitable information.

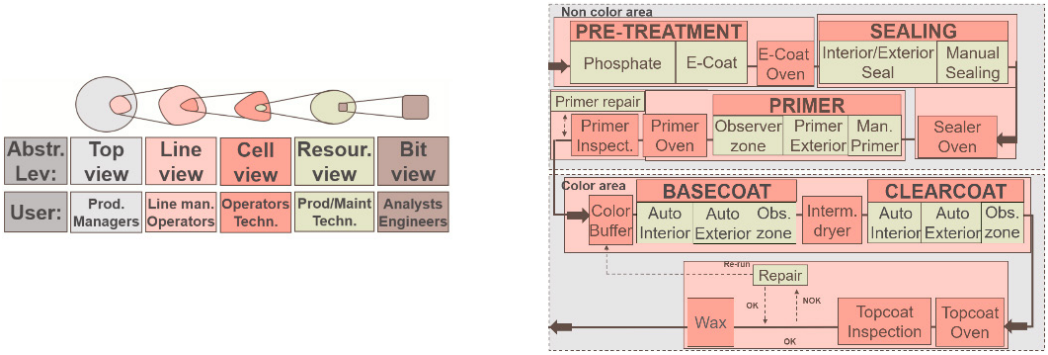

Fig. 3. (a) Illustration of the framework of the abstraction level from Top view to Bit view with each user group; (b) A new illustration of a simplified paint shop with the new constructed framework concept.

By applying the new framework on the simplified flowchart of the paint shop in Figure 1a, the allocated areas for abstraction levels results in a new illustration in Figure 3b.

The abstraction levels in Figure 3a represents different areas of the production plant from a user point of view. The users for the top view of the plant are the management and shows production rate, factory output and current operating mode for all subsystems. Since the simulation just has one cell operating, the top view will only show information and status from that booth. Figure 4a shows the designed top view interface, similar to the production flow chart in Figure 1a with information from indicators and pop-up messages. The interface enables the user to click at the chart to go down to the line view for that specific area or navigate using the option buttons.

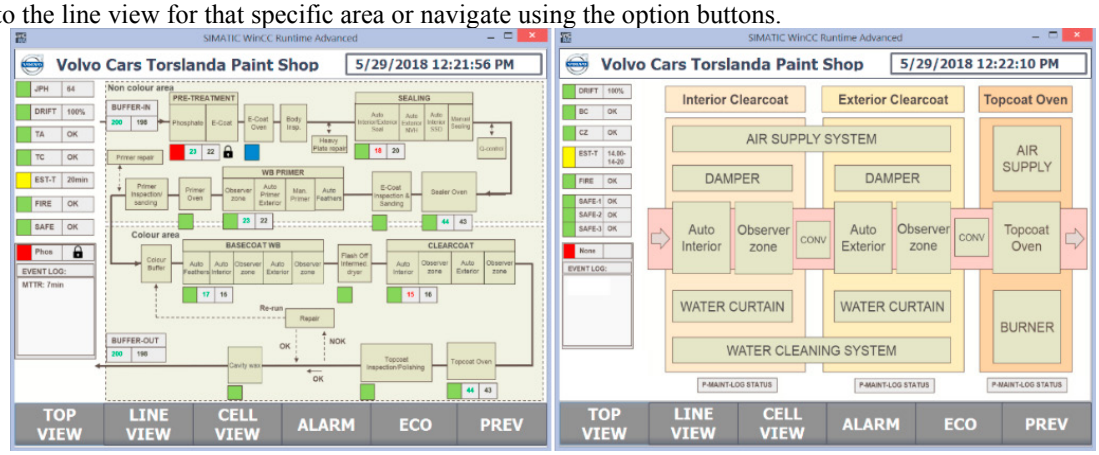

Fig. 4. (a) Top view interface of a simulated paint process, showing potential features for better understanding of the process for the whole plant; (b) The line view interface, showing geographically close systems for better understanding of surrounding processes and systems.

The line view addresses a smaller division of operators or line managers, seen in Figure 4b, is showing a production line in the paint shop with three cells, two different paint booths with observer zones and one subsequent oven, sealed from operators. Interconnected systems are also present how they are geographically located in relation to the transport system of car bodies. Similar to the top view, relevant information is shown to the left, but adjusted for this specific line since only information regarding the previous and upcoming production lines are of interest.

The cell view for the simulated concept model addresses to the operator working at that station, shown in Figure 5a. For this example, it is designed to fully represent and visualize the dynamic behavior and signal exchange between the different resources defined in the simulation. In the cell view, the user can choose any of the resources to open the resource view to gain full access of the specific equipment parameters but is not implemented in this example.

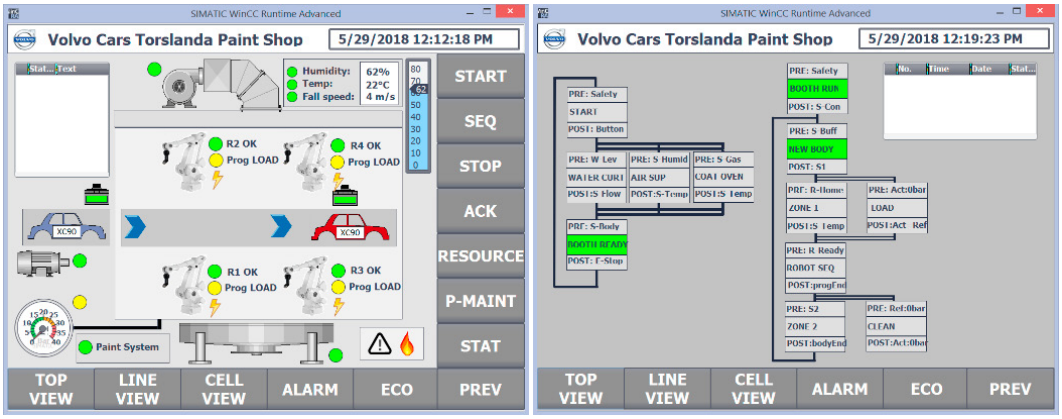

Fig. 5. (a) Cell view interface of a simulated paint process, showing the running simulation in real time with visual effects for better understanding; (b) A sequence chart connected to the running simulation for easy understanding what currently is being executed.

The sequence explained in Section 4.2 is described in the cell view with moving illustrations and indicators together with necessary information from the main operation and the interconnected systems. The cell view has an integrated control panel to operate and control the simulation as start, stop or acknowledge an error. A sequence chart to follow the control logic is implemented with additional features as sequence chart, as seen in Figure 5b.

5. Result

This section will present the result of the whole concept idea, including the simulation as a proof of concept, but also with the real-world application possibilities and features for a future implementation.

5.1. Integration and performance

The results from the simulation of the concept model in Section 4 proves how a visual framework can be applied with the use of extracted data from a process. Using SP as a tool for handling logic enables control, optimization and support for external connection with other clients and application using standardized communication protocols like OPC UA.

The virtual PLC used for the WinCC-project can with OPC UA listen and monitor the shared event pipeline, which proves how an external client can utilize the concept to either analyze or support the process with additional applications.

Templates for the visual interface has been created in WinCC as a framework standard for each abstraction levels, which is functional to both virtual and physical systems to be implemented with the framework hierarchy.

5.2. Level of abstraction in the framework concept

Each level of abstraction in the developed framework can be used if data would be extracted from any system or plant. Starting from the top view, instead of having several different interfaces and systems monitoring certain aspects of the process, one complete full overview is constructed to summarize the most important and vital information to the right user.

In addition to the top view in Figure 4a, more features can be implemented, e.g. maintenance status and progress for current breakdowns, error predictions based on statistic, pop-up notifications from client services, energy consumption reports or any information that could be of interest.

For line managers or smaller teams of workers, the line view could support and organize work on daily or weekly basis. In addition to the line view presented in Figure 4b, status and operating modes from interconnected system, maintenance reports or weekend planning can be shown to name a few.

More information can be shown for the operators in the cell view, depending on the specific type of operation, vital information from the interconnected systems can alarm the operator or give helpful knowledge and analysis about the current system and sequence.

The resource view can either have a general template interface or connect a more detailed interface from a supplier for any desired resource.

5.3. Applying the framework concept on real systems

The bit view in this framework concept is not a visual interface as the rest of the abstraction levels, instead it represents the extracted data collected from all resources to be reachable and accessible on the event bus which is illustrated in Figure 6.

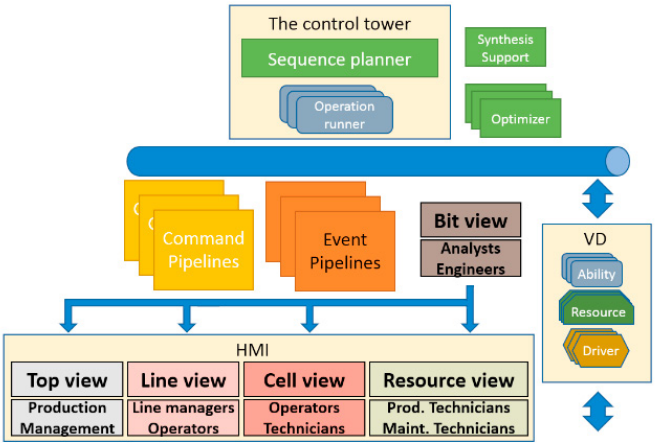

Fig. 6. Final concept for real world implementation with Sequence Planner and the framework concept to extract and visualize data.

The final concept together with Sequence Planner can be used for real world application on physical systems where the VD factory listen to real hardware and generating actual data to the event pipeline, accessible in the bit view to be distributed through the constructed framework concept in the visual interfaces.

6. Conclusion

It has been proven in this example that a concept framework for visualization of information in a running simulation with dynamics and dependencies as in a complex paint booth. It is already proven that Sequence Planner can be implemented on physical systems, using virtual devices and supporting clients to analyze process data and to have support for standardized communication protocol like OPC UA. Modeling and simulation of dynamic physics entities has been tested and has been proven to be possible for implementation.

For further investigation, the concept could be implemented on a full scaled virtual preparation commissioning to verify its functionality with actual system logic, dynamic and well-defined operations. It can also be tested and applied on a real physical plant or production system with all data already accessible in a virtual cloud.

For implementation of new production systems, it is of high importance for the investors to know exactly what they can get from the suppliers. The need for a solid technical requirement specification is vital in order to have a common understanding with the suppliers for which feature is required by the different equipment and resources to ensure that a compatible communication standard is used and how the data is extracted and stored.

By making all data accessible, different clients can be implemented to improve both the process by providing additional features or to analyze the current process with different aspects and purposes. A flexible system can extend the lifespan of a plant and make future improvements easier to integrate. Since a paint shop is built to be productive for 20-30 years, it can no longer have yesterday's technology since it will most likely be outperformed during its lifespan.

References

[1] J. Al-Jaroodi, N. Mohamed, and I. Jawhar, "A service-oriented middleware framework for manufacturing industry 4.0," ACM SIGBED Review, vol. 15, no. 5, pp. 29–36, 2018.

[2] M. A. Pcssoa, M. A. Pisching, L. Yao, F. Junqueira, P. E. Miyagi, and B. Benatallah, "Industry 4.0, how to integrate legacy devices: A cloud iot approach," in IECON 2018-44th Annual Conference of the IEEE Industrial Electronics Society. IEEE, 2018, pp. 2902–2907.

[3] F. Auris, J. Fisch, M. Brandl, S. Süß, A. Soubar, and C. Diedrich, "Enhancing data-driven models with knowledge from engineering models in manufacturing," in2018 IEEE 14th International Conference on Automation Science and Engineering (CASE). IEEE, 2018, pp. 653–656.

[4] A. Farooqui, K. Bengtsson, P. Falkman, and M. Fabian, "From factory floor to process models: A data gathering approach to generate, transform, and visualize manufacturing processes," CIRP Journal of Manufacturing Science and Technology, 2018.

[5] M. Rossoni, G. Colombo, and L. Bergonzi, "From customer requirements to detailed design: How do product data change?" in ASME 2018 International Mechanical Engineering Congress and Exposition. American Society of Mechanical Engineers, 2018, pp. V013T05A067–V013T05A067.

[6] H. Chen, T. Fuhlbrigge, and X. Li, "Automated industrial robot path planning for spray painting process: a review," in Automation Science and Engineering, 2008. CASE 2008. IEEE International Conference on. IEEE, 2008, pp. 522–527.

[7] L. Guan and L. Chen, "Trajectory planning method based on transitional segment optimization of spray painting robot on complex-free surface,"Industrial Robot: the international journal of robotics research and application, 2019.

[8] S. Bysko, J. Krystek, and S. Bysko, "Automotive paint shop 4.0," Computers & Industrial Engineering, 2018.

[9] P. Hoffmann, R. Schumann, T. M. Maksoud, and G. C. Premier, "Virtual commissioning of manufacturing systems a review and new approaches for simplification." in ECMS, 2010, pp. 175–181.

[10] C. G. Lee and S. C. Park, "Survey on the virtual commissioning of manufacturing systems," J. Comput. Des. Eng., vol. 1, no. 3, pp. 213–222, 2014.

[11] N. Shahim and C. Møller, "Economic justification of virtual commissioning in automation industry," in Winter Simulation Conference (WSC), 2016. IEEE, 2016, pp. 2430–2441.

[12] M. Ericsson, X. Zhang, and A.-K. Christiansson, "Virtual commissioning of machine vision applications in aero engine manufacturing," in 2018 15th International Conference on Control, Automation, Robotics and Vision (ICARCV). IEEE, 2018, pp. 1947–1952.

[13] S.-H. Suh, I.-K. Woo, and S.-K. Noh, "Development of an automatic trajectory planning system (atps) for spray painting robots," in Robotics and Automation, 1991. Proceedings., 1991 IEEE International Conference on. IEEE, 1991, pp. 1948–1955.

[14] N. R. Roobol,Industrial painting: principles and practices. Hanser-Gardner Publications, 1997.

[15] HARMONPA. (2017) How much will a new paint shop cost - a complete guide. [Online]. Available: https://www.pittsburghsprayequip.com/2017/05/19/much-will-new-paint-shop-cost-complete-guide/

[16] D. Lucke, C. Constantinescu, and E. Westkämper, "Smart factory - a step towards the next generation of manufacturing," in Manufacturing systems and technologies for the new frontier. Springer, 2008, pp. 115–118.

[17] H. Lasi, P. Fettke, H.-G. Kemper, T. Feld, and M. Hoffmann, "Industry 4.0," Business & Information Systems Engineering, vol. 6, no. 4, pp. 239–242, 2014.

[18] J. Lee, H.-A. Kao, and S. Yang, "Service innovation and smart analytics for industry 4.0 and big data environment," Procedia Cirp, vol. 16, pp. 3–8, 2014.

[19] J. Lee, B. Bagheri, and H.-A. Kao, "A cyber-physical systems architecture for industry 4.0-based manufacturing systems," Manufacturing Letters, vol. 3, pp. 18–23, 2015.

[20] B. Lennartson, K. Bengtsson, O. Wigström, and S. Riazi, "Modeling and optimization of hybrid systems for the tweeting factory," IEEE Transactions on Automation Science and Engineering, vol. 13, no. 1, pp. 191–205, 2016.

[21] A. Theorin, K. Bengtsson, J. Provost, M. Lieder, C. Johnsson, T. Lundholm, and B. Lennartson, "An event-driven manufacturing information system architecture for industry 4.0," International Journal of Production Research, vol. 55, no. 5, pp. 1297–1311, 2017. [Online]. Available: https://doi.org/10.1080/00207543.2016.1201604

[22] Frenus, "Customers' voice: Predictive maintenance in manufacturing, western europe," 2017. [Online]. Available: https://www.frenus.com/product/customers-voice-predictive-maintenance-manufacturing-report/

[23] D. Gorecky, M. Schmitt, M. Loskyll, and D. Zühlke, "Human-machine-interaction in the industry 4.0 era," in Industrial Informatics (INDIN), 2014 12th IEEE International Conference on. Ieee, 2014, pp. 289–294.

[24] G. Frey and L. Litz, "Formal methods in plc programming," in Systems, Man, and Cybernetics, 2000 IEEE International Conference on, vol. 4. IEEE, 2000, pp. 2431–2436.

[25] B. Lennartson, K. Bengtsson, C. Yuan, K. Andersson, M. Fabian, P. Falkman, and K. Akesson, "Sequence planning for integrated product, process and automation design," Ieee transactions on automation science and engineering, vol. 7, no. 4, pp. 791–802, 2010.

[26] K. Bengtsson, P. Bergagard, C. Thorstensson, B. Lennartson, K. Akesson, C. Yuan, S. Miremadi, and P. Falkman, "Sequence planning using multiple and coordinated sequences of operations," IEEE Transactions on Automation Science and Engineering, vol. 9, no. 2, pp. 308–319, 2012.

[27] S. Süß, S. Magnus, M. Thron, H. Zipper, U. Odefey, V. Fäßler, A. Strahilov, A. Kłodowski, T. Bär, and C. Diedrich, "Test methodology for virtual commissioning based on behavior simulation of production systems," in Emerging Technologies and Factory Automation (ETFA), 2016 IEEE 21st International Conference on. IEEE, 2016, pp. 1–9.

[28] M. Dahl, A. Albo, J. Eriksson, J. Pettersson, and P. Falkman, "Virtual reality commissioning in production systems preparation," in Emerging Technologies and Factory Automation (ETFA), 2017 22nd IEEE International Conference on. IEEE, 2017, pp. 1–7.