CHALMERS
UNIVERSITY OF TECHNOLOGY

Fluidized bed steam cracking of rapeseed oil: exploring the direct production of the molecular building blocks for the plastics industry

Downloaded from: https://research.chalmers.se, 2024-04-20 16:15 UTC

Citation for the original published paper (version of record):
Mandviwala, C., González Arias, J., Seemann, M. et al (2023). Fluidized bed steam cracking of rapeseed oil: exploring the direct production of the molecular building blocks for the plastics industry. Biomass Conversion and Biorefinery, 13: 14511-14522. http://dx.doi.org/10.1007/s13399-022-02925-z

N.B. When citing this work, cite the original published paper.

research.chalmers.se offers the possibility of retrieving research publications produced at Chalmers University of Technology. It covers all kind of research output: articles, dissertations, conference papers, reports etc. since 2004. research.chalmers.se is administrated and maintained by Chalmers Library

(article starts on next page)

Biomass Conversion and Biorefinery
https://doi.org/10.1007/s13399-022-02925-z

ORIGINAL ARTICLE

Fluidized bed steam cracking of rapeseed oil: exploring the direct production of the molecular building blocks for the plastics industry

Chahat Mandviwala[1] · Judith González-Arias[1] · Martin Seemann[1] · Teresa Berdugo Vilches[1] · Henrik Thunman[1]

Received: 10 March 2022 / Revised: 18 May 2022 / Accepted: 6 June 2022
© The Author(s) 2022

Abstract

Fossil-based production of plastics represents a serious sustainability challenge. The use of renewable and biogenic resources as feedstocks in the plastic industry is imminent. Thermochemical conversion enables the production of the molecular building blocks of plastic materials from widely available biogenic resources. Waste cooking oil (WCO) represents a significant fraction of these resources. This work provides insights into the thermochemical conversion of the fatty acids present in WCO, where rapeseed oil is used as the source of fatty acids. The experimental results reveal that fluidized bed steam cracking of rapeseed oil in the temperature range of 650–750 °C yields a product distribution rich in light olefins and mono aromatics. Up to 51% of light olefins, 15% of mono aromatics, and 13% of light paraffins were recovered through steam cracking. This means that up to 70% of the carbon in rapeseed oil was converted into molecular building blocks in a single step. The main conclusion from this study is that WCO and vegetable oils represent viable biogenic feedstocks for the direct production of the molecular building blocks, where the conversion is achieved through steam cracking in fluidized beds.

Keywords Waste cooking oil · Plastic production · Thermochemical conversion · Steam cracking · Fluidized bed · Rapeseed oil

1 Introduction

The circular use of natural resources is essential for achieving the 17 sustainable development goals set by the United Nations. For the petrochemical industry, and particularly that part of the industry that produces plastic materials, this requires a paradigm shift regarding the usage of fossil-based resources. Fossil-based resources dominate plastics manufacturing industries, accounting for almost 99% of the total production, making production based on fossil carbon reserves unsustainable [1]. Replacement of fossil-based carbon with reusable and recycled resources is, therefore, necessary for the production of plastics in the context of a circular economy.

Thermochemical conversion presents an opportunity to achieve the (theoretically) endless recycling of plastic materials, where the focus is on the efficient recovery of carbon atoms from abundantly available anthropogenic wastes [2, 3]. Research on the thermochemical conversion (pyrolysis, gasification, etc.) of plastic materials carried out over the last few decades has led to the creation of an extensive database of experimental results related to these processes [2, 3]. This database will play an important role in the widespread industrial adoption of these recycling processes.

Thunman and colleagues have described thermochemical conversion routes that enable unlimited recycling of any carbonaceous material towards the sustainable production of molecular building blocks that are of identical quality to those produced from fossil-based resources [2]. Figure 1 illustrates the three recycling routes for the thermochemical conversion of a carbonaceous feedstock, as previously described [2]. This combination of thermochemical conversion routes enables 100% recovery of the carbon atoms in the feedstock.

In this system, route A represents the direct production of the molecular building blocks from the feedstock. Routes B and C represent indirect production of the molecular building

✉ Chahat Mandviwala
chahat@chalmers.se

✉ Judith González-Arias
judith.gonzalez@chalmers.se

[1] Division of Energy Technology, Department of Space, Earth and Environment (SEE), Chalmers University of Technology, 412 96 Gothenburg, Sweden

Published online: 14 June 2022

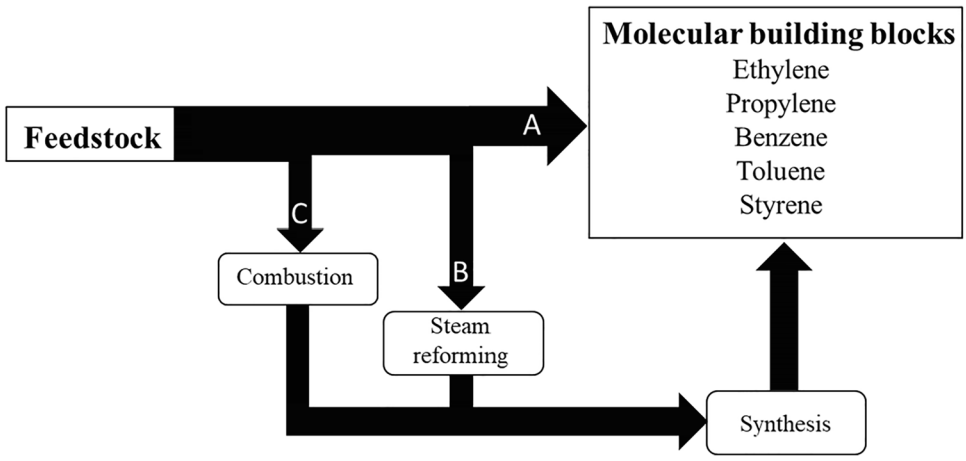

Fig. 1 Three recycling routes involved in the thermochemical conversion of a carbonaceous feedstock. Adapted from [2]

blocks using the by-products from route A through a combination of combustion, reforming and synthesis processes. Route B involves steam reforming of CH_4 and adjusting the H_2/CO ratio of the syngas to allow downstream production of the molecular building blocks. The indirect production of the molecular building blocks can be implemented, for instance, via methanol, whereby methanol is converted to olefins through the methanol-to-olefins (MTO) process [4]. An important aspect to consider in the implementation of these synthesis processes is the $(H_2-CO_2)/(CO+CO_2)$ ratio of the syngas. This ratio is commonly referred to as the 'R ratio'. The conventional synthesis processes require an R ratio of 2 [5]. The R ratio of syngas can be increased by the addition of pure H_2 to the gaseous mixture [6].

Route C refers to the combustion of those products that are not suitable for use in routes A and B, followed by the recovery of the carbon atoms in the form of CO_2. The recovered CO_2 can be forwarded to synthesis processes located downstream [7], thereby avoiding any leakage of carbon atoms from the system. Synthesis of the molecular building blocks through route C requires an additional input of pure H_2 to the system, which can be accomplished, for instance, through the electrolysis of water [8].

While route A is preferable from the thermodynamic point-of-view, the production of molecular building blocks through route A is dependent upon the molecular composition of the feedstock. This route corresponds to the naphtha and alkane steam cracking processes that are currently used for the production of the molecular building blocks at industrial scale. The naphtha and alkane steam cracking processes yield approximately 65 and 85 wt% of the molecular building blocks, respectively [9]. Feedstocks that have molecular compositions similar to naphtha or alkanes are suitable for use in route A [2].

In this context, vegetable oils that have naphtha-like aliphatic chains [10] are suitable for the production of the molecular building blocks through route A. The introduction of vegetable oils into this type of thermochemical recycling system for plastic materials will also compensate for the carbon deficit caused by the unrecoverable leakage and the ever-growing demand for plastic materials. Furthermore, stringent climate mitigation rules that involve the phasing out of fossil-based carbon will require the use of biogenic carbon in the plastics manufacturing industry. Thermochemical conversion of vegetable oils could be an innovative strategy for the achievement of this goal.

Apart from their suitability for thermochemical conversion, vegetable oils represent a major fraction of the available biogenic carbon resource. The worldwide production of vegetable oils reached 210 million metric tons (MMT) in year 2020 [11], of which the amount that ended up in the waste streams as waste cooking oil (WCO) has been estimated at 17 MMT [12, 13]. The global production of WCO represents a valuable feedstock for the plastics industry, considering the 11.2 MMT/year increase in the demand for plastic materials [14]. Therefore, the carbon deficit that arises in the thermochemical recycling system for plastic materials can be compensated almost entirely by the introduction of WCO into the recycling system.

A more resource-efficient way of processing the carbon atoms present in WCO will contribute to the transition towards a sustainable society. However, currently, most of the research activities aimed at WCO valorization are related to energy recovery, either through direct incineration or through the synthesis of biofuels [15–19]. That has led to the widespread adoption of WCO as a feedstock for the production of biofuels on the industrial scale. This approach allows the recovery of the energy content of the biogenic carbon but does not entail the circular use of carbon atoms.

Intensive research that focuses on the recovery of the molecular building blocks from WCO or vegetable oils is required to establish industrial processes that facilitate the circular use of the carbon atoms in WCO. Such processes would comply with the European Union's Waste Framework

Directive (WFD), which prioritizes the order of operations to be followed in waste management as follows: prevention, re-use, recycling, recovery (including energy recovery), and disposal [20]. From the recycling and sustainability perspectives, WCO and vegetable oils represent highly promising biogenic feedstocks that could be recycled to synthetic materials via thermochemical processes. Thus, WCO and vegetable oils could contribute to the phasing out of fossil-based raw materials used to produce new plastic materials.

To date, the literature on the direct production of the molecular building blocks from WCO or vegetable oils has been limited. A database of experimental results supporting the suitability of WCO or vegetable oils to produce the molecular building blocks is crucial for the development of such recycling technologies. Therefore, the present work not only fills an identified knowledge gap, but it also encourages further research into the circular utilization of these biogenic resources. This study aims to define the direct yields of the molecular building blocks from rapeseed oil, which is one of the most commonly used vegetable oils for cooking purposes. In particular, a fluidized bed steam cracking process is used as the recycling route for the thermochemical conversion of rapeseed oil.

2 Theoretical background

Vegetable oils are composed of complex mixtures of fatty acids (FA). These FA are carboxylic acid molecules with a long aliphatic chain that can be either saturated or unsaturated. In vegetable oils, these FA are in the form of triglycerides, i.e., three fatty acid molecules connected to a glycerol backbone through the carboxyl groups [21]. Figure S1 (Supplementary information) represents the molecular structure of rapeseed oil, which is one of the most widely used vegetable oils [22]. Unsaturated fatty acids (USFA), such as oleic acid, linoleic acid, and linolenic acid, account for up to 92% of the total FA content of rapeseed oil, while the remainder (8%) comprises saturated fatty acids (SFA). The SFA and USFA contents of vegetable oil depend on the type of vegetable oil (palm oil, sunflower oil, cottonseed oil, etc.). Nonetheless, the basic structure of the triglyceride molecules remains the same, except for the change in the numbers and positions of the carbon-to-carbon double [10].

The aliphatic chains present in vegetable oils make them a potential feedstock for the production of the molecular building blocks (e.g., ethylene, propylene, butadiene, benzene) of plastic materials. Currently, these building blocks are predominantly produced from fossil-based aliphatic hydrocarbons, through steam cracking [23]. In the steam cracking process, hydrocarbon molecules, which are either gaseous (LPG) or liquid (petroleum naphtha) in form, are broken down into smaller unsaturated molecules through cracking reactions [24]. The structural similarities between petroleum naphtha and the aliphatic chains present in the FA of vegetable oils make vegetable oils an attractive choice of feedstock for the steam cracking process. This process, when implemented according to route A (see Fig. 1), enables the direct production of the molecular building blocks. Table 1 summarizes the typical yields of the molecular building blocks from an industrial naphtha cracker and the product distribution from stream cracking of vegetable oil.

The feedstock used in the industrial steam cracking process has a very high paraffin content, i.e., the hydrocarbon molecules have very few or no carbon-to-carbon double bonds [26]. In contrast, the FA present in vegetable oils has a significantly higher number of carbon-to-carbon double bonds (Figure S1). The presence of the double bond in an aliphatic hydrocarbon chain weakens the C–H bond on the carbon atoms in the β-position, facilitating hydrogen abstraction at that position during the cracking [27]. This results in the formation of products with a lower H/C ratio (aromatics), as compared to the products obtained from the cracking of saturated hydrocarbons [27]. In this sense, a higher yield of aromatics is expected from the steam cracking of vegetable oil compared to predominantly paraffinic feedstocks, as previously reported by Zamostny et al. (see Table 1) [25].

Currently, the steam cracking of hydrocarbons is carried out in industrial furnaces, where the reactor tubes act as a physical barrier between the reaction zone and the heat source [28]. The hydrocarbon feedstock is cracked inside the tubes, while the combustion process on the outside provides the required heat for the cracking reactions (see Fig. 3a). However, this configuration becomes problematic when there is considerable formation of aromatic hydrocarbons, as in the case of vegetable oils. The increase in reactions forming aromatic hydrocarbons during the steam cracking process often leads to coke deposition on the tube walls of the cracking [29–31]. Coke deposits necessitate

Table 1 Yields (in wt%) of petrochemicals from steam cracking of ethane, naphtha, and vegetable oil

Product	Feedstock and reactor type		
	Ethane	Naphtha	Vegetable oil
	Tubular steam cracker	Tubular steam cracker	Pyrolysis GC
	800 °C	800 °C	820 °C
Ethylene	80	30	28
Propylene	2	13	11
C_4 fraction	3	13	23
Aromatics	0	9	19
CO_x	0	0	15
References	[9]	[9]	[25]

frequent shutdowns of production, to allow for decoking. This reduces the production capacity, increases the operational and maintenance costs, and shortens the lifespan of the tubes. Therefore, vegetable oils are regarded as an unattractive feedstock for industrial steam cracking. The removal of the double bonds in the feedstock molecules or the employment of a different reactor configuration is required to avoid this problem.

The processes that involve the elimination of the double bonds present in the triglyceride molecules of vegetable oil are well established [32–34]. These processes fall under the general umbrella of hydroprocessing technologies, which involve the removal of the double bonds and heteroatoms from vegetable oil in the presence of a catalyst and hydrogen atmosphere [32–34]. Since hydroprocessed vegetable oils (HVOs) are predominantly n-paraffins, steam cracking of HVO represents an opportunity to produce the molecular building blocks of the plastic industry [35, 36]. Karaba et al. demonstrated the suitability of HVO for the steam cracking process by obtaining large yields of ethylene (39.9–45.6 wt%), propylene (18.7–19.2 wt%) and C_4 hydrocarbons (15.2–18.2 wt%) from a micro pyrolysis reactor [36].

Despite the attractive opportunity that HVO represents, the research related to the steam cracking of HVO remains limited as of today. That is because HVOs have found a wide application in the biofuels industry. The hydrocracking process is the most common industrial process used for the production of HVO [37]. Figure 2 depicts the typical product distribution obtained from the hydrocracking of vegetable oils based on data from the literature [38, 39]. Of the products described in Fig. 2, the products in the range of C_{16}–C_{18} hydrocarbons are commercially sold as HVO diesel, a transportation fuel. Concomitant with HVO diesel production, propane and hydrocarbons in the range of naphtha and kerosene are obtained as byproducts from the hydrocracking process [38, 39]. The naphtha and kerosene fractions are used for the production of bio-based gasoline and jet fuel, respectively [38, 39]. The competing biofuels market, therefore, presents a significant challenge for HVO's adaptation as a feedstock to the petrochemical industry.

To address the abovementioned challenge, it will be necessary to convert vegetable oils directly into petrochemicals through steam cracking, eliminating the need to produce HVO intermediately. As mentioned earlier, a reactor configuration, that is robust enough to handle the coke formation, is crucial for the steam cracking of vegetable oils. In this regard, the dual fluidized bed (DFB)–reactor configuration is an attractive alternative for the steam cracking of vegetable oils. A DFB system consists of two interconnected fluidized bed reactors with the hot bed material circulating between the two reactors (see Fig. 3b) [40–42]. The industrial process that most commonly applies a DFB system is the fluid catalytic cracking (FCC) process [43]. The DFB system also has the interesting advantage over tubular reactors that the coke deposits on the bed material are continuously removed by oxidation within the combustor [44]. Several studies on the cracking of vegetable oils under FCC conditions can be found in the literature [45, 46]. In the FCC process, the triglyceride molecules in vegetable oils are converted to aliphatic hydrocarbons on the surface of a catalyst. The catalysts used in the commercial FCC process consist of microporous aluminosilicates (e.g., zeolites), which act as active sites for the catalytic reactions [47]. During the FCC process, the active sites of the catalyst undergo deactivation due to irreversible adsorption of the feedstock impurities and the formation of coke on the catalyst [47]. As a consequence, a part of the catalyst inventory needs to be replaced with a fresh catalyst to sustain the catalytic reactions [47]. The sensitivity of FCC catalysts towards feedstock impurities makes the commercial FCC process unfavorable for conversion of feedstocks from waste streams, such as WCO.

Alternatively, a DFB system dedicated to the conversion of feedstocks from waste streams can be operated with bed materials that are resistant to feedstock impurities (e.g., quartz sand, olivine) [40]. The industrial operation of such DFB systems has been successfully demonstrated at different locations including Gothenburg (GoBiGas and

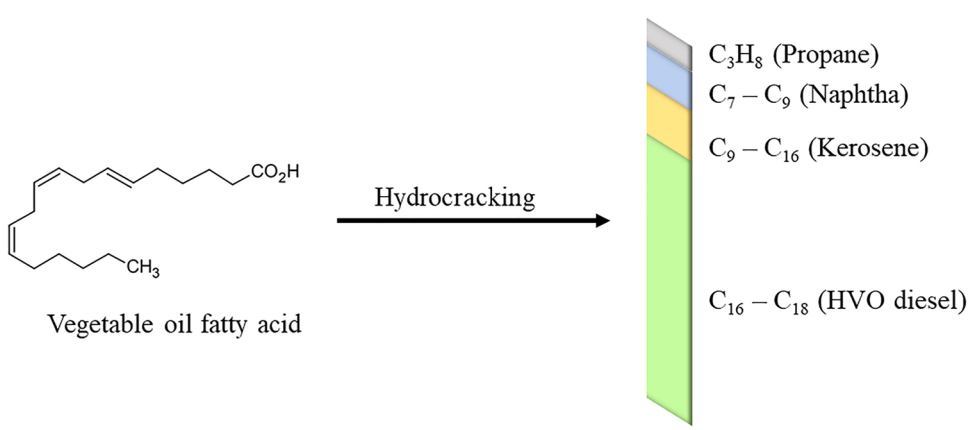

Fig. 2 Typical product distribution from the hydrocracking of vegetable oils. (The sizes of the colored bars are proportional to the yields of the respective products)

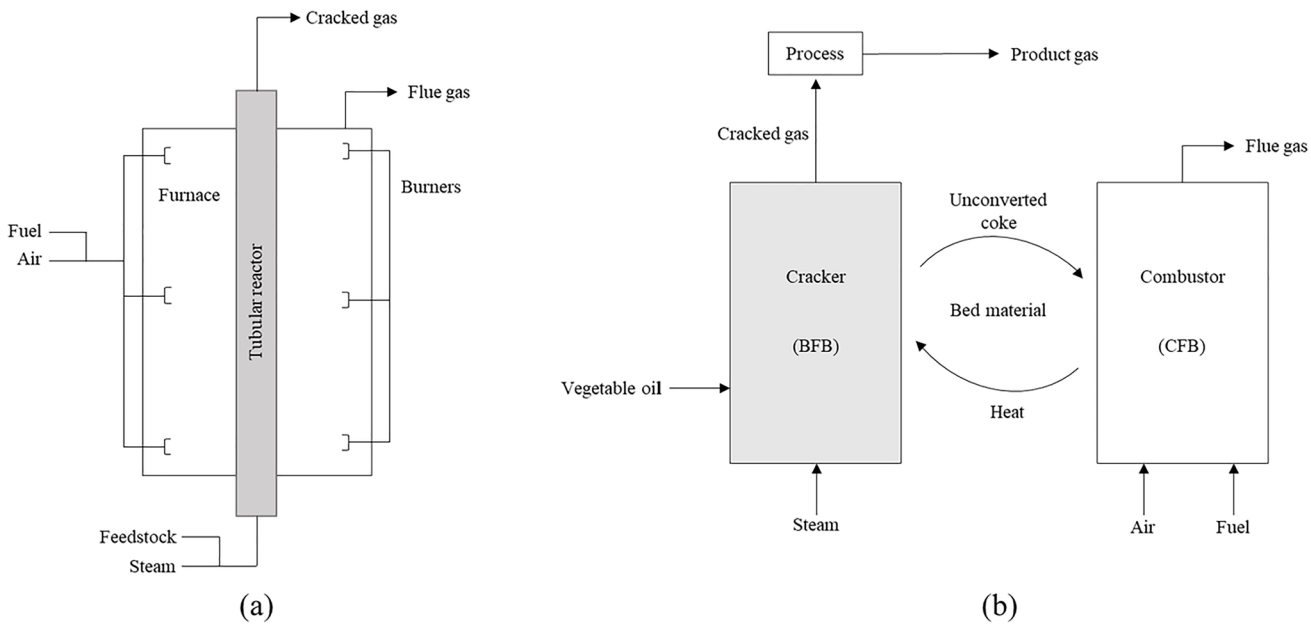

Fig. 3 Schematics of a tube from a tubular steam cracker **a** and a DFB cracker **b**

Chalmers), Senden, Oberwart, Villach, and Güssing [48]. A DFB system that is designed for the steam cracking of hydrocarbons can be referred to as a "DFB cracker." The schematics of a typical tubular steam cracker and a DFB cracker are given in Fig. 3. In a DFB cracker, the cracking reactor is usually operated as a bubbling fluidized bed (BFB), whereas the combustor is a circulating fluidized bed (CFB) reactor [2, 42]. The feasibility of steam cracking vegetable oils in a DFB cracker can, therefore, be studied from the product distribution obtained from the steam cracking of vegetable oil in a standalone BFB reactor.

In addition to the choice of reactor configuration, steam cracking process temperatures are also important. The cracking temperature determines the cracking severity, which in turn indicates how the extent to which the C–C bonds of the feedstock are broken down. The thermal cracking of the triglyceride molecules at 400–600 °C yields a product distribution rich in liquid aliphatic hydrocarbons in the range of C_7–C_{16} [49–52]. The yield of the liquid hydrocarbons decreases at temperatures higher than 600 °C due to the secondary cracking reactions [51]. When it comes to the production of lighter hydrocarbons, a lower cracking severity is unfavorable since it will require the conversion of the liquid aliphatic products with a secondary cracking stage. However, to the best of the authors' knowledge, experimental data related to the cracking of vegetable oils at higher cracking severity remain limited as of today. This work aims to obtain a product distribution rich in C_1–C_4 hydrocarbons, from a one-step fluidized bed steam–cracking process operating at a temperature range of 650–750 °C.

3 Materials and methods

3.1 Materials

The rapeseed oil used in this work was obtained from a local supermarket in Gothenburg, Sweden. Rapeseed oil used in this work presents an elemental composition in weight of 79.6% C, 11.4% H, 8.97% O, and 0.03% S. The elemental composition of the rapeseed oil presented here was calculated based on the average FA composition of rapeseed oil found in the literature [45, 53–55]. The physical properties and elemental composition of the bed material used in this work, as provided by the supplier, are presented in Table S1 (Supplementary information).

3.2 Reactor setup

The reactor setup used in this work is similar to the one described in a previous study [56]. The schematic of the experimental setup is illustrated in Fig. 4. The BFB reactor used in this work is a stainless-steel tube with an internal diameter (ID) of 88.9 mm and a height of 1305 mm. This BFB reactor when operated with batch feeding mimics the condition of a DFB cracker in which the cracking reactor is operated as a BFB reactor (as mentioned in Sect. 2). The fluidization gases are introduced from the bottom of the reactor through a windbox and a gas distributor plate. The fluidization gases are premixed in the windbox before entering the fluidized bed via the gas distributor plate. The volumetric flow rate of the fluidization gases is regulated by mass flow controllers (MFC).

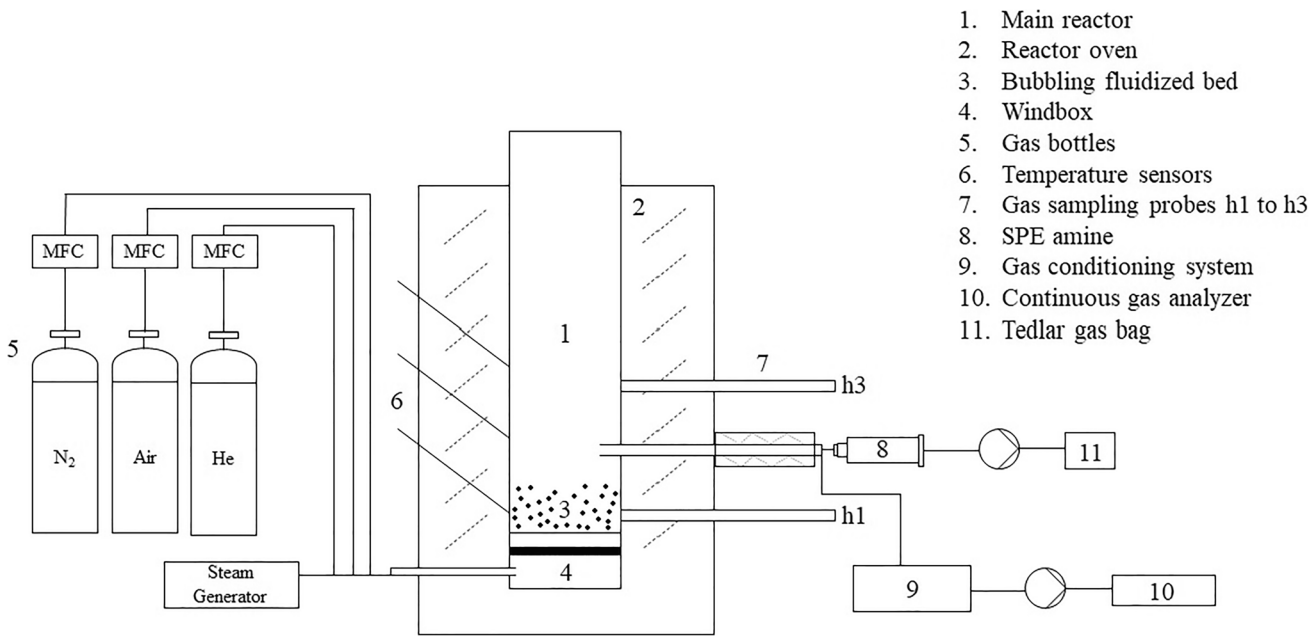

Fig. 4 Schematic of the experimental setup. Adapted from [56]

The reactor is heated externally with an electric furnace. The three thermocouples installed inside the BFB reactor continuously measure and log the temperature along the height of the reactor. The temperature of the fluidized bed is measured by the bottom-most thermocouple (Fig. 4). The other two thermocouples are used to measure the temperature in the freeboard. The bed material is loaded from the top of the reactor before turning on the reactor oven. In Fig. 4, one of the sampling ports, h1 to h3, samples a split stream of gases exiting the reactor.

Gas is sampled through one of the ports, while the remaining ports are sealed to prevent the bed material from entering the port. The sampling port is chosen depending on the height of the fluidized bed. The temperature of the probe is maintained at 350 °C with an electrical heating band, to avoid the condensation of hydrocarbons and steam. The sampled gas is then split into two streams, with one stream passing through a gas conditioning system, and the other passing through an amine used for solid-phase extraction (SPE). The gas conditioner consists of scrubbing and cooling the sampled gas with isopropanol, then drying the gas with silica gel beads and glass wool. The dry, cold gas is then analyzed by a SICK GMS 820 permanent gas analyzer. In this study, the SPE amine used is the SupelcleanTM Envi-CarbTM/NH2 tube, obtained from Sigma-Aldrich. The gas samples are collected in a 0.5 L Tedlar gas bag.

3.3 Steam cracking tests

Rapeseed oil (2 g per batch) was dropped directly on the top of the hot fluidized bed. A system with higher and continuous feeding would have negligible evaporation losses due to the radiative heat transfer from the reactor walls. This is due to the lower surface area to volume ratio of the feedstock in such a system. In order to recreate such a feeding system, each batch of rapeseed oil was frozen at – 18 °C to reduce the surface area to volume ratio, thereby minimizing the losses due to evaporation. Three sets of experiments (RO650, RO700, and RO750) were conducted at the bed material temperatures of 650 °C, 700 °C, and 750 °C, respectively. Each set was performed thrice to ensure the repeatability of the experiments. Table 2 describes the

Table 2 Experimental procedures for the steam cracking tests

Experimental stage	Fluidization gases (l_N/min)				Time
	Nitrogen	Steam	Air	Helium	
Oxidation of the bed material	0.00	0.00	5.00	0.00	Until 20.9 vol% O_2
Pyrolysis	2.00	4.00	0.00	0.05	90 s
Coke combustion	0.00	0.00	5.00	0.05	90 s
Oxidation of the bed material	0.00	0.00	5.00	0.00	Until 20.9 vol% O_2

experimental procedures for each set of experiments. The experimental procedure for the steam cracking test is identical to the procedure used in a recent study [56].

The fluidized bed material was subjected to an oxidizing environment at the desired reaction temperature before dropping each batch of rapeseed oil on it. Oxidation was achieved by fluidizing the reactor with air. Slipstream gases leaving the reactor were sampled through sampling port h2 and their O_2 concentration (vol%) was continuously measured. The fluidized bed was considered fully oxidized when the O_2 concentration leaving the bed matched the ambient O_2 concentration of 20.9 vol%. During each batch of experiments, the bed material was fully oxidized to simulate the conditions in a DFB cracker, where the bed material enters the cracker after having been fully oxidized. Helium was used as one of the fluidization gases during each experiment's pyrolysis and coke combustion stages. The volume of gases produced during coke combustion and pyrolysis was determined by using helium as a tracer gas.

Steam cracking of rapeseed oil produces three main types of products: gas (H_2, CH_4, C_2H_4, etc.), liquid (benzene, toluene, etc.), and solid (unconverted coke). Gases and liquids leave the reactor with the fluidization gases, while solids remain in the reactor with the bed materials.

A part of the gas sampled during steam cracking was used to analyze for its H_2, CO, CO_2, and CH_4 concentrations (vol%). The pyrolysis process was continuously monitored in order to assess the total time required to pyrolyze the feedstock and to make sure there were no volatile gases left after a 90-s sampling period. The sole purpose of the measurement with the continuous gas analyzer was to determine the total time required for the pyrolysis stage. The detection of hydrocarbons heavier than CH_4 was beyond the scope of the continuous gas analyzer.

For a comprehensive analysis of the product species, a slip stream of the sampled gas during the pyrolysis stage was passed through the SPE amine. Gases that exited the SPE amine were collected in a 0.5-L Tedlar gas bag. The gas samples collected during each experiment were analyzed in the Agilent 490 micro-GC system. The Agilent micro-GC has four different columns, each with a TCD detector. A summary of the gases measured by the micro-GC system is shown in Table 3. Detection of aliphatic compounds with more than four carbon atoms was beyond the scope of the analytic methods used in this work. The uncalibrated CP-WAX column was used to detect benzene and toluene in the collected gas samples.

The quantification of aromatic hydrocarbons was performed with a Bruker GC-FID system according to the solid-phase adsorption (SPA) method described by [57]. The measurements carried out with the CP-WAX column of the micro-GC system were to ensure that all of the benzene and toluene were captured and quantified by the SPA method.

Table 3 Gases measured using the Agilent 490 micro-GC system

Column	Gases	Calibration
CP-Cox	He, H_2, air (coelution of N_2 and O_2), CO, CH_4	4-Point calibration
PoraPLOT U	CO_2, C_2H_4, C_2H_6. C_2H_2, C_3H_x	4-Point calibration
CP-WAX 52 CB	Benzene, toluene	No calibration
CP-Sil 5 CB	C_4H_x	2-Point calibration

Solid coke remained in the reactor along with the bed material after the pyrolysis stage. The yield of coke was measured by combusting it in presence of air and measuring the amounts of CO and CO_2 produced during the process. The fluidization gases were changed from steam and nitrogen to air, to allow combustion of the coke in the bed material. The combustion gases were sampled for 120 s and collected in a separate 0.5-L Tedlar bag for GC analysis. The compositions of combustion gases collected in the gas bag were determined using the micro-GC system.

3.4 Data evaluation

The data evaluation method used here is adapted from a previous study [56]. The results produced in this work have all been subjected to the same sampling, analysis and evaluation methods. The systematic errors are expected to be similar across all the experiments, making the observed trends statistically significant. The results shown in the next section are the average values calculated from multiple repetitions of the experiments.

The overall carbon balance in this work was calculated based on the species collected in the Tedlar gas bags and the SPE amine column during each series of experiments. The molar yields (mol/kg) of the gaseous species collected in the Tedlar gas bags were calculated based on the He-tracing method. Equation 1 was used to determine the molar yield (mol/kg) of all the gaseous species collected in the gas bags.

$$n_i = \frac{c_i}{m_f} \cdot \left(\frac{V_{He-tracing}}{C_{He}} \right) \cdot \frac{1}{V_m} \tag{1}$$

In Eq. (1), n_i is the molar yield and c_i is the concentration of a gaseous species in the gas bags, as measured by the micro-GC, respectively; $V_{He\text{-}tracing}$ and C_{He} are the volume and concentration of helium gas, respectively; m_f is the mass of rapeseed oil feed for each batch, and V_m is the molar volume of an ideal gas at 25 °C. The molar yield of each species was then converted to a carbon yield according to its molecular formula. The yield of aromatic hydrocarbons was calculated based on the SPA method that can be found elsewhere [57]. The molar yield of each species is then transformed to the corresponding carbon and hydrogen

yield based on the total carbon and hydrogen contents of the rapeseed oil.

The different species measured in this work are reported in %carbon to show the contribution of each of them to the global carbon balance. This gives a better understanding of how the carbon atoms are distributed among the different products obtained. This option of reporting was selected over presenting the results in wt%, since this later might be misleading. The feedstock mainly contains carbon and hydrogen as indicated in Sect. 3. Therefore, it is reasonable to focus on the carbon distribution.

4 Results and discussion

4.1 Product distribution

The products derived from the steam cracking of rapeseed oil are categorized as olefins, paraffins, aromatics, carbon oxides (CO_x), coke, and hydrogen (H_2) (Table 4). As mentioned in Sect. 3, the micro-GC can detect C_3 and C_4 hydrocarbons only as C_3H_x and C_4H_x, respectively. The separation of these compounds into individual olefins and paraffins was outside the scope of the micro-GC analysis. Therefore, for simplicity, C_3H_x and C_4H_x are placed in the olefins group along with C_2H_4. The error values indicate the reproducibility of the experiments, as they are determined by the standard deviation among the three repeats of the experiments. Carbon oxides and hydrocarbon species are reported as %carbon (of the carbon content of the feedstock), and hydrogen gas (H_2) as %hydrogen (of the hydrogen content of the feedstock). The results obtained with the sampling and the analysis employed in this work correspond to the carbon balance closure of 97%, 96%, and 94% for RO650, RO700, and RO750, respectively. The undetected carbon stated in Table 4 is the difference between the total carbon in the feedstock and the amount of carbon measured in the products.

The highest yield of olefins (51.14%) was detected in the RO650 experiment, and it decreased with increases in the bed material temperature, with yields of 46.96% obtained for RO700 and 37.56% for RO750. The opposite trend was observed for the total yield of aromatic compounds, which followed the behavior observed during the steam cracking of petroleum naphtha and polyethylene [58, 59]. The compositions of the hydrocarbon species obtained in this work are comparable to those obtained from a typical naphtha cracker and the cracking of vegetable oils [9, 25]. The yield of carbon oxides shows a remarkable difference between the cracking products obtained from naphtha crackers and those obtained in the present work. This is due to the presence of oxygen atoms in the feedstock used in this work. The yields of CO_x obtained in this work are in accord with the CO_x yields reported by Zamostny et al. (see Table 1) [25].

Table 4 Product distributions from the steam cracking of rapeseed oil. Carbon containing species are reported as their contribution (%) to the carbon balance, and H_2 is reported as its contribution (%) to the hydrogen balance

	RO650	RO700	RO750
wt% carbon			
Total olefins	51.14 ± 0.69	46.96 ± 0.36	37.56 ± 1.54
C_2H_4	24.12 ± 0.78	24.30 ± 0.23	23.29 ± 0.76
C_3H_x	16.76 ± 0.35	14.55 ± 0.21	9.30 ± 0.57
C_4H_x	10.26 ± 0.44	8.11 ± 0.08	4.97 ± 0.26
Total aromatics	19.15 ± 0.08	20.75 ± 2.68	22.72 ± 0.70
Benzene	7.67 ± 0.01	8.73 ± 1.16	10.81 ± 0.80
Toluene	4.51 ± 0.04	4.63 ± 0.66	4.37 ± 0.01
Xylene	1.44 ± 0.01	1.00 ± 0.13	0.66 ± 0.02
Styrene	1.30 ± 0.04	1.63 ± 0.24	1.76 ± 0.01
Naphthalene	0.72 ± 0.03	1.29 ± 0.16	2.06 ± 0.04
Others	3.51 ± 0.06	3.49 ± 0.33	3.06 ± 0.10
Total paraffins	12.86 ± 0.06	14.22 ± 0.07	14.92 ± 0.23
CH_4	6.80 ± 0.05	8.64 ± 0.11	10.06 ± 0.29
C_2H_6	6.06 ± 0.01	5.57 ± 0.04	4.86 ± 0.09
Total carbon oxides	11.57 ± 1.02	11.82 ± 0.16	17.24 ± 0.77
CO	5.03 ± 0.13	5.55 ± 0.19	9.88 ± 0.37
CO_2	6.54 ± 1.14	6.26 ± 0.35	7.36 ± 0.52
Coke	2.17 ± 0.29	1.90 ± 0.11	1.70 ± 0.34
Undetected*	3.11 ± 0.75	4.35 ± 2.85	5.87 ± 0.51
wt% hydrogen			
Hydrogen (H_2)	10.06 ± 2.65	12.33 ± 0.55	20.36 ± 0.52

*Undetected represents the difference between the total carbon in the feedstock and the amount of carbon in the measured products.

4.2 Production of the molecular building blocks

As one of the objectives of this work was to assess the possibility of recovering the carbon atoms of vegetable oil as the molecular building blocks of plastic materials, we consider the direct and indirect production of the building blocks from the steam cracking of vegetable oil. The products obtained from the steam cracking experiments performed in this work can be grouped, based on the recycling routes described in the Sect. 1 (see Fig. 1): route A (C_2H_4, C_2H_6, C_3H_x, C_4H_x, benzene, toluene, xylenes, styrene), route B (H_2, CH_4, CO, CO_2), and route C (naphthalene, other aromatics, coke, undetected). The distributions of carbon atoms among the abovementioned groups of products are shown in Fig. 5.

The direct production through route A (as explained in Sect. 1) was dependent upon the bed material temperature. The highest yield of 72.13% was obtained for a bed material temperature of 650 °C. Slightly lower yields of 68.53% and 60.02% were observed at bed material temperatures of 700 °C and 750 °C, respectively. At higher bed

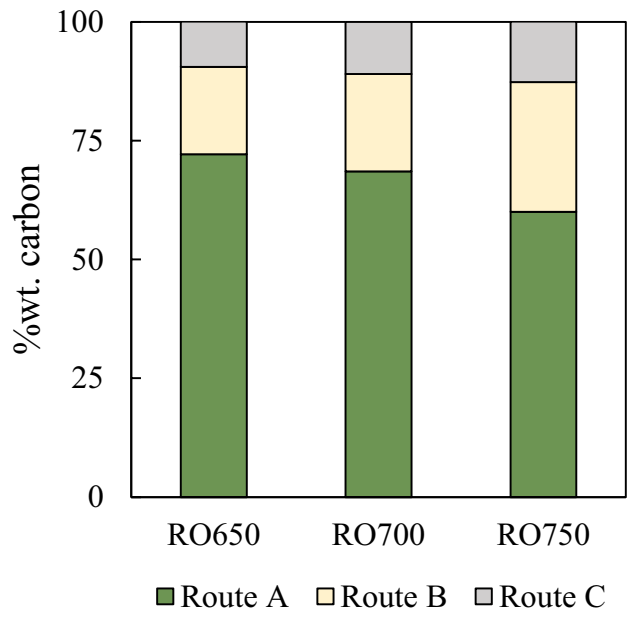

Fig. 5 Distributions of carbon among the product groups, based on thermochemical recycling routes **A**, **B** and **C** (route A: direct production of petrochemical via steam cracking; route B: steam reforming followed by synthesis; route C: combustion followed by synthesis)

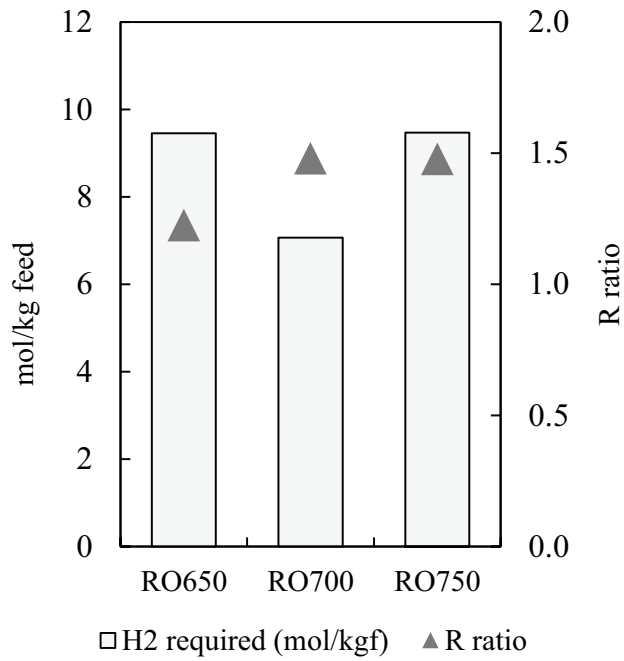

Fig. 6 The R ratio of the syngas and the amount of H_2 required to attain the optimal R ratio of 2 for each of the test series. The R ratio is defined as: $R = (H_2 - CO_2)/(CO + CO_2)$

temperatures, the yields of the molecular building blocks were reduced by the higher yields of CO, CO_2, and CH_4.

The produced CH_4, CO, CO_2, and H_2 can be considered as raw syngas to be sent for steam reforming and for synthesis processes downstream of the cracker. The yields of raw syngas were 18.37%, 20.46%, and 27.29% for RO650, RO700, and RO750, respectively. The high yields of syngas underline the requirement for conversion through the proposed route B (recall Fig. 1), in which the syngas is converted to olefins to increase the recovery of carbon atoms in the form of the molecular building blocks. The R ratios and the amounts of H_2 required (in mol/kg feed) for optimal production of methanol from the syngas obtained in this work are presented in Fig. 6. Implementation of the proposed route B downstream of the cracker yields carbon recovery rates of 90.50%, 88.99%, and 87.32% (as the molecular building blocks), based on the product compositions obtained from the RO650, RO700, and RO750 tests, respectively.

The products, which include naphthalene, other aromatics, and coke along with the undetected hydrocarbons, can be valorized through route C. As mentioned earlier, route C will increase the recovery rate of carbon atoms present in the feedstock to 100%.

4.3 Discussion

This work presents the results for the steam cracking of raw rapeseed oil. The physical and chemical properties of WCO differ slightly from those of raw vegetable oil. The frying process leads to the formation of free fatty acids (FFA), rendering WCO more-acidic than its corresponding raw vegetable oil [60]. The kinematic viscosity of the vegetable oil also increases during the frying process, whereas the molecular weight decreases. Moreover, the frying process also leads to the incorporation of heteroatoms (S, N, and O) into the WCO [51, 52].

Despite that, the total FA content of vegetable oil is unchanged by the frying process [60]. Accordingly, the fraction of carbon atoms present as aliphatic chains (Figure S1) in the WCO should be the same as that in the raw vegetable oil. Additionally, cracking at temperatures above 600 °C can almost entirely remove the heteroatoms, present in the WCO, from the hydrocarbon species [51]. A similar product distribution can be expected from steam cracking of WCO as from raw vegetable oil. Nevertheless, the steam cracking of real-life WCO remains to be fully elucidated. The impacts of impurities present in WCO on the steam cracking process and the processes that lie downstream, a topic that is beyond the scope of the present work, need to be investigated.

Regardless of the possibilities for producing from WCO the molecular building blocks for plastics, WCO has found a niche application in the production of biofuels. That is primarily due to the fact that the current regulatory framework promotes biofuel production from this renewable carbon. Nevertheless, in a scenario in which the use of fossil-based carbon is phased out, it is justifiable to prioritize the

recycling of carbon-based materials according to the waste hierarchy, as well as the development of recycling methods such as that proposed in this work. The technology readiness level of DFB systems in combination with the experimental results, such as those obtained in this work, will facilitate the development of such recycling methods.

5 Conclusions

Sustainable production of plastics requires both recycled and renewable resources. Vegetable oils and WCO represent widely available renewable resources. An extensive experimental database is desirable for the development of technologies that enable the production of plastics from these resources. In this work, conversion of vegetable oil into monomers of plastic materials was investigated in a fluidized bed steam cracking process. A product distribution rich in light olefins (C_2–C_4) and mono aromatics (BTXS) was obtained at cracking temperatures between 650 and 750 °C. It was found that the combined yield (wt% carbon) of C_2-C_4 olefins was 51.14% at the cracking temperature of 650 °C. The yield of light olefins decreased with the increase in the cracking temperature, to 46.96 and 37.56% at 700 and 750 °C, respectively. The decrease in the yield of light olefins translated into the increase in the yield of total aromatics (19.15 to 22.72%) and carbon oxides (11.57 to 17.24%) with the increases in cracking temperature. It was concluded that vegetable oils and, subsequently, WCO can be effectively converted, in a single step, to the monomers of plastic materials by fluidized bed steam cracking. Using such a process, up to 70% of the carbon atoms in vegetable oils can be converted to monomers. The remaining 30% of the carbon atoms can be converted into monomers through a combination of reforming and synthesis processes downstream of the steam cracking step.

Finally, the present work raises the possibility of introducing other food wastes rich in fatty acids (e.g., animal fat) as a renewable feedstock to the petrochemical industry. There is also a need for further research to understand the consequences of the impurities present in these wastes on the steam cracking process.

Supplementary Information The online version contains supplementary material available at https://doi.org/10.1007/s13399-022-02925-z.

Acknowledgements The authors thank Jessica Bohwalli, Johannes Öhlin and Rustan Hvitt for their technical support during the experiments.

Author contribution Chahat Mandviwala: conceptualization, methodology, investigation, data curation, writing—original draft. Judith González-Arias: conceptualization, methodology, investigation, data curation, writing—original draft. Martin Seemann: supervision, writing—review and editing, project administration. Teresa Berdugo Vilches: writing—review and editing. Henrik Thunman: conceptualization, writing—review and editing, funding acquisition.

Funding Open access funding provided by Chalmers University of Technology. This work was financially supported by Borealis AB (Project number: 49514–1), the Swedish Gasification Center (SFC), and the Swedish Energy Agency.

Declarations

Conflict of interest The authors declare no competing interests.

Open Access This article is licensed under a Creative Commons Attribution 4.0 International License, which permits use, sharing, adaptation, distribution and reproduction in any medium or format, as long as you give appropriate credit to the original author(s) and the source, provide a link to the Creative Commons licence, and indicate if changes were made. The images or other third party material in this article are included in the article's Creative Commons licence, unless indicated otherwise in a credit line to the material. If material is not included in the article's Creative Commons licence and your intended use is not permitted by statutory regulation or exceeds the permitted use, you will need to obtain permission directly from the copyright holder. To view a copy of this licence, visit http://creativecommons.org/licenses/by/4.0/.

References

1. Payne J, McKeown P, Jones MD (2019) A circular economy approach to plastic waste, Polym Degrad Stab 165. https://doi.org/10.1016/j.polymdegradstab.2019.05.014
2. Thunman H, Berdugo Vilches T, Seemann M, Maric J, Vela IC, Pissot S, Nguyen HNT (2019) Circular use of plastics-transformation of existing petrochemical clusters into thermochemical recycling plants with 100% plastics recovery, Sustain Mater Technol 22. https://doi.org/10.1016/j.susmat.2019.e00124
3. Papari S, Bamdad H, Berruti F (2021) Pyrolytic conversion of plastic waste to value-added products and fuels: a review, Materials. 14. https://doi.org/10.3390/ma14102586
4. Tian P, Wei Y, Ye M, Liu Z (2015) Methanol to olefins (MTO): from fundamentals to commercialization, ACS Catal 5. https://doi.org/10.1021/acscatal.5b00007
5. Giuliano A, Freda C, Catizzone E (2020) Techno-economic assessment of bio-syngas production for methanol synthesis: a focus on the water–gas shift and carbon capture sections, Bioeng 7. https://doi.org/10.3390/bioengineering7030070
6. Chiodini A, Bua L, Carnelli L, Zwart R, Vreugdenhil B, Vocciante M (2017) Enhancements in biomass-to-liquid processes: gasification aiming at high hydrogen/carbon monoxide ratios for direct Fischer-Tropsch synthesis applications. Biomass Bioenerg 106:104–114. https://doi.org/10.1016/J.BIOMBIOE.2017.08.022
7. Wang W, Wang S, Ma X, Gong J (2011) Recent advances in catalytic hydrogenation of carbon dioxide, Chem Soc Rev 40. https://doi.org/10.1039/c1cs15008a
8. Shiva Kumar S, Himabindu V (2019) Hydrogen production by PEM water electrolysis – a review, Mater Sci Energy Technol. 2. https://doi.org/10.1016/j.mset.2019.03.002
9. Matar S, Hatch LF (2001) Crude oil processing and production of hydrocarbon intermediates. Chemistry of petrochemical processes. https://doi.org/10.1016/b978-088415315-3/50004-3
10. Orsavova J, Misurcova L, Vavra Ambrozova J, Vicha R, Mlcek C (2015) Fatty acids composition of vegetable oils and its contribution to dietary energy intake and dependence of cardiovascular

mortality on dietary intake of fatty acids, Int J Mol Sci 16. https://doi.org/10.3390/ijms160612871
11. U.S. Department of Agriculture (2022) Oilseeds: world markets and trade. Foreign Agricultural Service. http://apps.fas.usda.gov/psdonline/circulars/oilseeds.pdf
12. Loizides MI, Loizidou XI, Orthodoxou DL, Petsa D (2019) Circular bioeconomy in action: collection and recycling of domestic used cooking oil through a social, reverse logistics system, Recycling. 4. https://doi.org/10.3390/recycling4020016
13. Gui MM, Lee KT, Bhatia S (2008) Feasibility of edible oil vs. non-edible oil vs. waste edible oil as biodiesel feedstock, Energy. 33. https://doi.org/10.1016/j.energy.2008.06.002
14. Plastics Europe (2020) EU plastics production and demand - first estimates for 2020. Assoc Plast Manufacturers, Plastics Europe. http://plasticseurope.org/media/eu-plastics-production-and-demand-first-estimates-for-2020-2/
15. Hsiao M-C, Liao P-H, Lan NV, Hou S-S (2021) Enhancement of biodiesel production from high-acid-value waste cooking oil via a microwave reactor using a homogeneous alkaline catalyst. Energies (Basel) 14:437. https://doi.org/10.3390/en14020437
16. Sarno M, Iuliano M (2019) Biodiesel production from waste cooking oil, Green Processing and Synthesis. 8. https://doi.org/10.1515/gps-2019-0053
17. Meira M, Quintella CM, Ribeiro EMO, Silva HRG, Guimarães AK (2015) Overview of the challenges in the production of biodiesel, Biomass Conversion and Biorefinery. 5. https://doi.org/10.1007/s13399-014-0146-2
18. Muhbat S, Tufail M, Hashmi S (2021) Production of diesel-like fuel by co-pyrolysis of waste lubricating oil and waste cooking oil. Biomass Conversion and Biorefinery. https://doi.org/10.1007/s13399-021-01569-9
19. Yusuff AS, Thompson-Yusuff KA, Igbafe AI (2022) Synthesis of biodiesel via methanolysis of waste frying oil by biowaste-derived catalyst: process optimization and biodiesel blends characterization. Biomass Conversion and Biorefinery. https://doi.org/10.1007/s13399-022-02389-1
20. Official Journal of the European Union (2018) Directive (EU) 2018/2001 of the European Parliament and of the Council of 11 December 2018on the promotion of the use of energy from renewable sources. http://eur-lex.europa.eu/legal-content/EN/TXT/?uri=uriserv:OJ.L_.2018.328.01.0082.01.ENG
21. Mosher M (1992) Organic chemistry. Sixth edition (Morrison, Robert Thornton; Boyd, Robert Neilson), J Chem Educ 69. https://doi.org/10.1021/ed069pa305.2
22. Statista, • Worldwide production major vegetable oils, 2012–2021 | Statista, (2021). https://www.statista.com/statistics/263933/production-of-vegetable-oils-worldwide-since-2000/ (accessed September 29, 2021).
23. Yang M, You F (2017) Comparative techno-economic and environmental analysis of ethylene and propylene manufacturing from wet shale gas and naphtha, Ind Eng Chem Res 56 https://doi.org/10.1021/acs.iecr.7b00354
24. Alfke G, Irion WW, Neuwirth O.S (2007) Oil refining, in: Ullmann's encyclopedia of industrial chemistry, Wiley-VCH Verlag GmbH & Co. KGaA. https://doi.org/10.1002/14356007.a18_051.pub2
25. Zámostný P, Bělohlav Z, Šmidrkal J (2012) Production of olefins via steam cracking of vegetable oils, Resour Conserv Recycl 59. https://doi.org/10.1016/j.resconrec.2011.03.007
26. Akah A, Al-Ghrami M (2015) Maximizing propylene production via FCC technology, Appl Petrochem Res 5. https://doi.org/10.1007/s13203-015-0104-3
27. Zámostný P, Bělohlav Z, Starkbaumová L, Patera J (2010) Experimental study of hydrocarbon structure effects on the composition of its pyrolysis products, J Anal Appl Pyrolysis 87. https://doi.org/10.1016/j.jaap.2009.12.006
28 Zimmermann H, Walzl R (2009) Ethylene, in: Ullmann's encyclopedia of industrial chemistry. Wiley-VCH Verlag GmbH & Co KGaA, Weinheim, Germany. https://doi.org/10.1002/14356007.a10_045.pub3
29. Kopinke FD, Zimmermann G, Reyniers GC, Froment GF (1993) Relative rates of coke formation from hydrocarbons in steam cracking of naphtha. 3. Aromatic hydrocarbons, Ind Eng Chem Res 32. https://doi.org/10.1021/ie00023a027
30. Kopinke FD, Zimmermann G, Nowak S (1988) On the mechanism of coke formation in steam cracking-conclusions from results obtained by tracer experiments, Carbon N Y. 26. https://doi.org/10.1016/0008-6223(88)90027-9
31. Kopinke FD, Zimmermann G, Reyniers GCGF (1993) Froment, Relative rates of coke formation from hydrocarbons in steam cracking of naphtha. 2. Paraffins, naphthenes, mono-, di-, and cycloolefins, and acetylenes, Ind Eng Chem Res 32. https://doi.org/10.1021/ie00013a009
32. Huber GW, 'Connor PO, Corma A (2007) Processing biomass in conventional oil refineries: production of high quality diesel by hydrotreating vegetable oils in heavy vacuum oil mixtures, Appl Catal A Gen 329. https://doi.org/10.1016/j.apcata.2007.07.002
33. Zhang Z, Wang Z, Chen Z, Zhang Z (2017) Hydroconversion of waste cooking oil into green biofuel over hierarchical USY-supported NiMo catalyst: a comparative study of desilication and dealumination, Catalysts. 7. https://doi.org/10.3390/catal7100281
34. Donnis B, Egeberg RG, Blom P, Knudsen KG (2009) Hydroprocessing of bio-oils and oxygenates to hydrocarbons. Understanding the reaction routes, Topics in Catalysis. 52. https://doi.org/10.1007/s11244-008-9159-z
35. Moretti C, Junginger M, Shen L (2020) Environmental life cycle assessment of polypropylene made from used cooking oil, Resources, Conserv Recycl. 157. https://doi.org/10.1016/j.resconrec.2020.104750
36. Karaba A, Patera J, Ruskayova PD, Carmona H de P, Zamostny P (2021) Experimental evaluation of hydrotreated vegetable oils as novel feedstocks for steam-cracking process, Processes. 9. https://doi.org/10.3390/pr9091504
37. Aatola H, Larmi M, Sarjovaara T, Mikkonen S (2009) Hydrotreated vegetable Oil (HVO) as a renewable diesel fuel: trade-off between NOx, particulate emission, and fuel consumption of a heavy duty engine, SAE Int J Engines 1. https://doi.org/10.4271/2008-01-2500
38. Bezergianni S, Kalogianni A (2009) Hydrocracking of used cooking oil for biofuels production, Bioresource Technol 100. https://doi.org/10.1016/j.biortech.2009.03.039
39. Bezergianni S, Voutetakis S, Kalogianni A (2009) Catalytic hydrocracking of fresh and used cooking oil, Ind Eng Chem Res 48. https://doi.org/10.1021/ie900445m
40. Berdugo Vilches T, Marinkovic J, Seemann M, Thunman H (2016) Comparing active bed materials in a dual fluidized bed biomass gasifier: olivine, bauxite, quartz-sand, and ilmenite, Energy Fuels. 30. https://doi.org/10.1021/acs.energyfuels.6b00327
41. Berdugo Vilches T, Seemann M, Thunman H (2018) Influence of in-bed catalysis by ash-coated olivine on tar formation in steam gasification of biomass, Energy Fuels. 32. https://doi.org/10.1021/acs.energyfuels.8b02153
42. Wilk V, Hofbauer H (2013) Conversion of mixed plastic wastes in a dual fluidized bed steam gasifier, Fuel. 107. https://doi.org/10.1016/j.fuel.2013.01.068
43. Sadeghbeigi R (2012). Fluid catalytic cracking handbook. https://doi.org/10.1016/C2010-0-67291-9
44. Berdugo Vilches T (2018) Operational strategies to control the gas composition in dual fluidized bed biomass gasifiers (Doctoral thesis, Chalmers University of Technology, Gothenburg, Sweden). Retrieved from http://research.chalmers.se/en/publication/504578

45. Dupain X, Costa DJ, Schaverien CJ, Makkee M, Moulijn JA (2007) Cracking of a rapeseed vegetable oil under realistic FCC conditions, Appl Catal B Environ 72. https://doi.org/10.1016/j.apcatb.2006.10.005
46. Melero JA, Clavero MM, Calleja G, García A, Miravalles R, Galindo T (2010) Production of biofuels via the catalytic cracking of mixtures of crude vegetable oils and nonedible animal fats with vacuum gas oil. Energy Fuels. https://doi.org/10.1021/ef900914e
47. Cerqueira HS, Caeiro G, Costa L, Ramôa Ribeiro F (2008) Deactivation of FCC catalysts, J Mol Catal A Chem 292. https://doi.org/10.1016/j.molcata.2008.06.014
48. Larsson A, Kuba M, Berdugo Vilches T, Seemann M, Hofbauer H, Thunman H (2021) Steam gasification of biomass – typical gas quality and operational strategies derived from industrial-scale plants, Fuel Process Technol 212. https://doi.org/10.1016/j.fuproc.2020.106609
49. Kozliak E, Mota R, Rodriguez D, Overby P, Kubátová A, Stahl D, Niri V, Ogden G, Seames W (2013) Non-catalytic cracking of jojoba oil to produce fuel and chemical by-products, Ind Crop Prod 43. https://doi.org/10.1016/j.indcrop.2012.07.042
50. Kubátová A, Luo Y, Šťávová J, Sadrameli SM, Aulich T, Kozliak E, Seames W (2011) New path in the thermal cracking of triacylglycerols (canola and soybean oil), Fuel. 90. https://doi.org/10.1016/j.fuel.2011.04.022
51. Qing M, Long Y, Liu L, Yi Y, Li W, He R, Yin Y, Tian H, He J, Cheng S, Xiang J (2022) Pyrolysis of the food waste collected from catering and households under different temperatures: assessing the evolution of char structure and bio-oil composition. J Anal Appl Pyrol 164:105543. https://doi.org/10.1016/j.jaap.2022.105543
52. Chen WH, Lin YY, Liu HC, Chen TC, Hung CH, Chen CH, Ong HC (2019) A comprehensive analysis of food waste derived liquefaction bio-oil properties for industrial application, Appl Energy. 237. https://doi.org/10.1016/j.apenergy.2018.12.084
53. Gladine C, Meunier N, Blot A, Bruchet L, Pagès X, Gaud M, Floter E, Metin Z, Rossignol A, Cano N, Chardigny JM (2011) Preservation of micronutrients during rapeseed oil refining: a tool to optimize the health value of edible vegetable oils? Rationale and design of the Optim'Oils randomized clinical trial, Contemp Clin Trials 32. https://doi.org/10.1016/j.cct.2010.11.003
54. Gunstone FD (2011) Vegetable Oils in Food Technology: Composition, Properties and Uses. Second Edition. https://doi.org/10.1002/9781444339925
55. Batista ACF, Vieira AT, Rodrigues HS, Silva TA, Assunção RMN, Beluomini MA, Rezende HP, Hernandez-Terrones MG (2014) Production and physicochemical characterization of methylic and ethylic biodiesel from canola oil, Revista Brasileira de Engenharia de Biossistemas. 8. https://doi.org/10.18011/bioeng2014v8n4p289-298
56 Mandviwala C, BerdugoVilches T, Seemann M, Faust R, Thunman H (2022) Thermochemical conversion of polyethylene in a fluidized bed impact of transition metal-induced oxygen transport on product distribution. Journal of Analytical and Applied Pyrolysis. 163:105476. https://doi.org/10.1016/j.jaap.2022.105476
57. Israelsson M, Seemann M, Thunman H (2013) Assessment of the solid-phase adsorption method for sampling biomass-derived tar in industrial environments, Energy Fuels. 27 https://doi.org/10.1021/ef401893j
58. Simon CM, Kaminsky W, Schlesselmann B (1996) Pyrolysis of polyolefins with steam to yield olefins, J Anal Appl Pyrolysis 38. https://doi.org/10.1016/S0165-2370(96)00950-3
59. Towfighi J, Zimmermann H, Karimzadeh R, Akbarnejad MM (2002) Steam cracking of naphtha in packed bed reactors, Ind Eng Chem Res 41. https://doi.org/10.1021/ie010636e
60. Leung DYC, Guo Y (2006) Transesterification of neat and used frying oil: optimization for biodiesel production, Fuel Process Technol 87. https://doi.org/10.1016/j.fuproc.2006.06.003

Publisher's note Springer Nature remains neutral with regard to jurisdictional claims in published maps and institutional affiliations.