THESIS FOR THE DEGREE OF LICENTIATE OF ENGINEERING

in

Thermo and Fluid Dynamics

A Two-Stroke Range Extender Engine For Heavy Duty BEV applications

LENNARTH ZANDER

Division of Combustion and Propulsion Systems

Department of Mechanics and Maritime Sciences

CHALMERS UNIVERSITY OF TECHNOLOGY

Gothenburg, Sweden 2020-12-10

A Two-Stroke Range Extender Engine For Heavy Duty BEV applications

LENNARTH ZANDER

Thesis for the degree of Licentiate of Engineering 2020:22

Division of Combustion and Propulsion Systems
Department of Mechanics and Maritime Sciences
Chalmers University of Technology
SE-412 96 Gothenburg
Sweden
Telephone +46 (0)31 772 1000

Chalmers Reproservice
Gothenburg, Sweden 2020

A Two-Stroke Range Extender Engine For Heavy Duty BEV applications

LENNARTH ZANDER

Division of Combustion and Propulsion Systems
Department of Mechanics and Maritime Sciences
CHALMERS UNIVERSITY OF TECHNOLOGY

Abstract

A back-up range extender (REX) is proposed to support battery electric vehicles (BEV) for heavy duty applications. A single cylinder crank case scavenged two-stroke SI-internal combustion engine (ICE) with a turbocharger system is considered powerful and small enough to be installed directly on the existing electric machine in the electric powertrain. The two-stroke engine needs a specially designed turbocharger system assisted by an afterburner system to fulfill the scavenging and exhaust emission requirements. This thesis has investigated and developed such a charging system functionality and demonstrated it on a 125cc engine single cylinder engine. This shows that a 125cc single cylinder two-stroke engine was able to obtain 50 kW or 400 kW/L swept volume indicating that an upscaled version of this engine to 425cc will be able to produce the desired rated power of 150 kW.

List of publications

This thesis is based on the work contained in the following publications:

Publication A (Submitted):

Zander, L., Dahlander, P., "Turbocharged Two-Stroke SI Engine as Back Up Range Extender for Battery Electric Vehicles**",** SAE International Journal of Engines.

Publication B (Submitted):

Zander L. , Dahlander, P., "Analysis of a Turbocharged Single-Cylinder Two-Stroke SI-Engine Concept", SAE Conference Detroit 2021.

Keywords:

Two-stroke engine, single cylinder, gas exchange, after burner, REX, turbocharged, turbo charged, Range Extender.

Acknowledgements

My journey to the Thesis of Licentiate of Engineering has been far from straight forward. In my family we did not have a history of academic education, but both my parents always encouraged studies and supported me the best they could. Some of my early knowledge was very hands on with too fast mopeds at a prematured age. This caused some tension in my very legal and normal family, especially when I arrived home in a police car after some speed record attempts…

I was lucky to realize early in life that school, vehicles and engines can actually intercept in the future to increase my knowledge and *maybe* also send work opportunities my way. So I managed gymnasium and spent two very interesting years at Husqvarna Motorcyklar AB in Ödeshög. I am not able to express in text my happiness to have a payed work doing two-stroke engines dyno testing. Social life in Ödeshög for a guy from Stockholm was another story but I like to mention one person who meant a lot to me during these years. His name is Peteris Lauberts and he spent a lot of time with me during the dark nights in Ödeshög telling me a lot of energizing stories from his MSc studies at KTH. We also read a lot of SAE-papers during this period trying to understand some of the things we learned from the dyno testing. This period gave me my motivation back for studies and led me to Chalmers University of Technology1984.

Chalmers gave me a lot of theoretical knowledge and of course I ended up in the Internal Combustion Engine group as PhD-student 1989. Life in general is rather complicated and a kind of career led me through the different Swedish car, truck and engine manufactures leaving my post graduate academic studies at rest for some 30 years. Most of the time I kept my contact with Chalmers and the different names of the institution responsible for internal combustion engines. During all these years Professor Ingemar Denbratt tried to convince me to finish what I once started. This happened in the turn between 2018 and 2019 during my current employment at Scania. Thanks to him and my colleagues at Scania, Eric Olofsson, Per Stålhammar, John Gaynor and Magnus Pelz, we found an interesting research topic for the future electric powertrains and funds from CERC. Professor GP Blair meant a lot to me during my studies and employments. Reading his books, SAE-papers and attending his lectures at Queens University of Belfast and several SAE-congresses gave me a lot of knowledge in the area of gas exchange and unsteady compressible flow. A major part of my research was carried on during parts of the day normally referred to as late nights or weekends where my lovely wife Anette had to take the late shifts. Thanks for always being supportive. The consumption of oxidation catalysts during the engine tests turned out to be significant and thanks to my old friend Rolf Bruck at Emitec different catalysts were made available. Also, a big thanks to Petter Dahlander who always do all he can to support me as my supervisor and examiner.

Table of contents

1 Introduction

1.1 Background

Battery Electric Vehicles (BEV) are considered to be a very interesting alternative for future light and heavy duty vehicles. Because of more weight and longer daily distances heavy duty vehicles needs larger energy storages compared to light duty vehicles. Energy storage today is considered to be batteries. Batteries contain less energy per unit of mass than traditional fuels for conventional powertrains and they are also expensive and heavy. Batteries need recharging and related infrastructure. A REX (Range Extender) is an onboard charging device where an internal combustion engine (ICE) drives a generator to create electric current to recharge the batteries. REX may be an interesting area for some applications and especially in situations when external charging is not available. REX can be utilized during operation from here referred to as in-use REX and is widely investigated in light duty applications such as cars at a rated power of 25-50 kW.

REX for heavy duty applications were not addressed much but a lot can be learned from the light duty applications. To summarize [2,4,6,7, 10 and 11] point out that 2-3 cylinder SI-engines at 15-30 kW is the recommended technology. SI-engines were preferred because of simpler exhaust after treatment. Rotary- and two-stroke engine were considered technically interesting because of high power density and also promising noise, vibration and harshness properties (NVH) but they are not available to purchase as existing components.

1.2 Motivation

If a small and powerful ICE can be utilized and installed directly in the existing electric machine in the BEV-powertrain space, weight and cost will be saved. A single cylinder crank case scavenged two-stroke SI-engine will meet the installation demands and can be an option if it can be made powerful enough. The desired specific performance levels needed will require a charging system. A charging system for a single cylinder crank case scavenged two-stroke engine needs to fulfill specific requirements to maintain the scavenging process which is the aim of this thesis. Utilizing the electric machine in the existing BEV-powertrain limits the REX to a back-up REX which can only be used when the vehicle is out of operation due to discharged battery. This thesis focuses on back-up REX for heavy duty applications which is only utilized when the vehicle at standing still.

The power requirements for the back-up REX will not be driving cycle dependent but based on the acceptable time for conditioning and recharging the batteries. The target to do so is fulfilled with a rated power of 150 kW. Figures 1 and 2 show the installation benefits from a compact back-up REX compared to an in-use REX which makes room for more batteries or cargo.

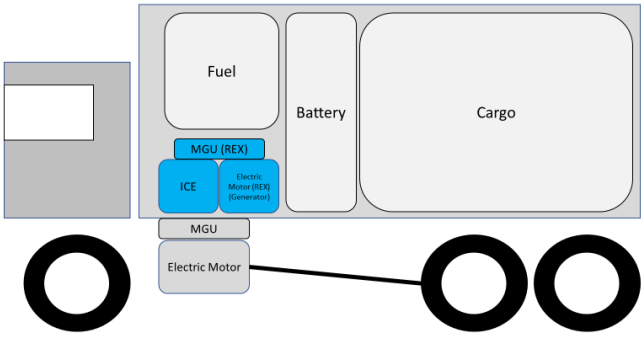

Figure 1. The In-Use-REX combine the battery energy storage with a fuel energy storage and a REX-unit with independent (Motor Generator Unit) MGU and Electric Motor (EM) occupying one battery module.

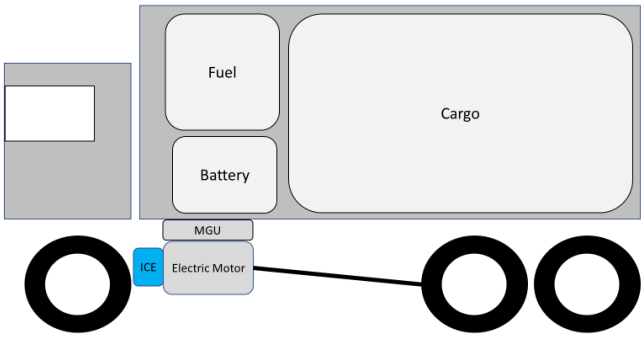

Figure 2: The Back-Up REX combines the battery energy storage with a fuel energy storage and a REX-unit collocated with the existing BEV-EM and BEV-MGU.

Two-stroke SI-engines are known to produce very high specific performance levels [16] in combination with small dimensions but are not considered as a primary alternative for REX-applications because two-stroke engines are not identified as available and matured products. If this concern is taken out from the equation the two-stroke engine have several promising benefits. The absence of a large cylinder head and complicated lubrication system makes the dimensions small and improves the number of installation opportunities. Performance wise a 125 cc two-stroke SI-engine can produce a BMEP of 10 bar and 20-25 kW. A four-stroke SI-engine needs to produce a BMEP of 20 bar to achieve the same performance levels which is not possible without a charging device. However, if the four-stroke engine use a charging device it will outperform the two-stroke engine. So, in order to maintain the performance advantage, the two-stroke engine also needs a charging system which results in some special challenges addressed by this thesis.

The gas exchange process can be described by a number of key parameters. The first is delivery ratio (DR) and is sometimes also called volumetric efficiency. DR can range from 0-150 % and express how much of the inhaled air which is occupying the engine with the swept volume as the reference volume. Some of the inhaled air will not participate in the combustion because they are lost through the exhaust port. Trapping efficiency (TE) is the parameter describing how much air is kept inside the cylinder after scavenging. Scavenging ratio (SR) is similar to DR but the reference volume is the sum of the swept volume and the combustion chamber volume.

The main concern for the emissions and fuel consumption are the scavenging process of the two-stroke engine. The task for the scavenge pump is to deliver air for the coming combustion and push out exhaust gases. Because of the limited crank case compression ratio, the scavenging process becomes sensitive to the difference between air- and exhaust pressure. This will be shown later and has a significant impact on delivery ratio (DR) and trapping efficiency (TE).

If the pressure from the scavenge pump becomes too high, scavenge air is lost through the exhaust port and if it gets too low a lot of exhaust gases will remain in the combustion chamber. Figure 3 shows the orientation of the different components in the gas exchange and charging system.

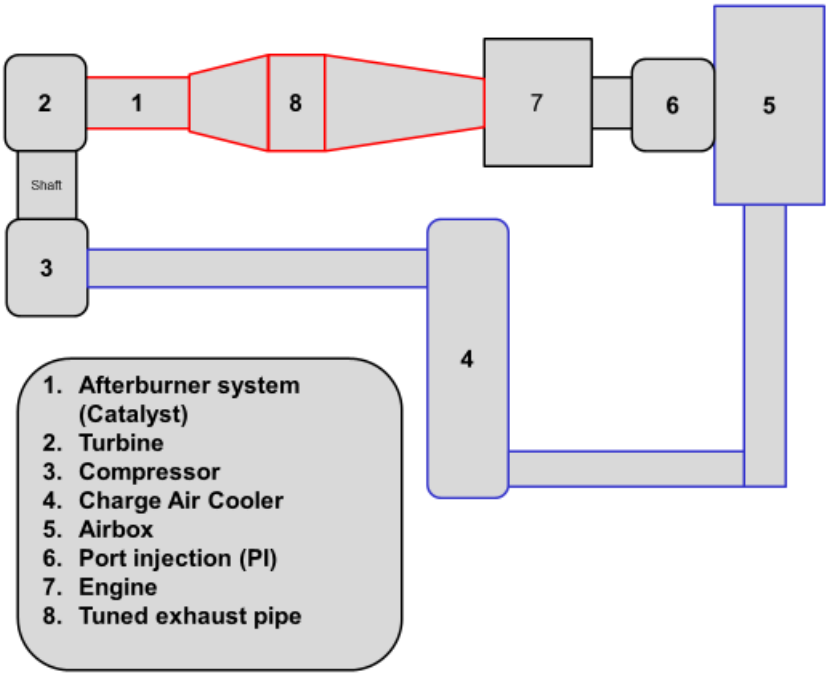

Figure 3: Schematic depiction of the concept and of how the turbocharged two-stroke engine with a catalytic afterburner system could be designed

1.3 Objectives

The research work is to investigate the requirements for the gas exchange system for a two-stroke engine for a charging system to further improve its performance benefits. If the performance obtained can be combined with the small dimensions, the engine can be mounted as a back-up REX-unit directly on the existing electric machine in a heavy duty BEV-application. The research task:

- Design a single cylinder crank case scavenged two-stroke SI-engine as a small and powerful enough ICE-alternative for a back-up REX.
- Develop a calibrated 1D-simulation model to investigate the charging system requirements for such an engine.
- Develop and utilize a refined 1D-simulation model and propose a suitable charging system.
- Build an experimental engine based on the simulation results and verify the performance on an engine dyno.

2 Simulations and Experimental setup

2.1 Simulation set up

1D-engine simulation is considered to be an appropriate tool to assess different charging systems before building an experimental engine. The first step before engine simulations could be conducted was to calibrate a 1D-model based on engine experiments from a naturally aspirated experimental engine. The calibrated simulation model was used with different combinations of air- and exhaust pressure applied in the ambient around the engine. This method creates pressures around the engine which is independent of engine speeds and is not possible with more physically correct charging models. But this model will run much quicker than a more advanced 1D-simulation model with a more complete charging object.

Once the assessment of different pressure scenarios was done, it was possible to create a window for a suitable charging system and move to a more advanced 1D-engine simulation model with charging components and an afterburner object. In this model it was also decided to use charging components which were commercially available to be able to build the experimental hardware. 1D-simulations have some special challenges which needs to be taken into account. The 1D model assumes that piston-controlled scavenging is achieved with a conventional loop scavenging system that uses around 75 % of the cylinder bore for scavenging purposes, with the piston-controlled exhaust port being in close proximity to the scavenging port. The direction of the scavenging flow is controlled by the geometry of the scavenging ports and transfer ducts, which enhances the flow’s 3D character.

A limitation of 1D models is that they cannot properly describe such 3D effects. This limitation can be overcome by using scavenging models based on a combination of perfect scavenging and perfect mixing [16]. Accurate modeling of a given engine's scavenging properties requires multiple experimental measurements of SE and TE at different scavenging ratios (SR). Alternatively, one can utilize previous experimental measurements such as those reported by Blair [17]. Please see Figure 4 for the basic relationship between Scavenging ratio (SR) and Trapping efficiency (TE) for different scavenging systems. Perfect displacement is the best scavenging which can be achieved with sharp boundaries between air and exhaust gases. Perfect mixing is the worst scavenging which can be achieved since air and exhaust gases are perfectly mixed with each other. Schemes 1-3 is examples of existing scavenging systems with different degrees of refinement. Scavenging Efficiency (SE) is a measure of how much exhaust gases by volume which is still left in the cylinder after the scavenging is done. Trapping Efficiency (TE) is a measure of how much of the inhaled air mass is kept inside the cylinder after the scavenging. Once the SE(SR) and TE(SR) have been determined, GT-suite simulations can be performed with customized scavenging settings rather than the default perfect mixing settings. However, changing the pressure ratio over the engine gas exchange system will significantly affect the scavenging properties, so this aspect of the simulations must be considered. The 125cc engine modeled is presented in more details in table 1.

Table 1: Specifications for the 125 cc engine. The trapped compression ratio is low because the exhaust port is occupying almost half of the stroke of the engine during high speed operation.

Displaced volume	125 cc
Stroke	54 mm
Bore	54 mm
Connecting Rod	107 mm
Compression ratio (Trapped)	7:1
Port system	5 port scavenging and triple exhaust ports. Induction through reed valves in the cylinder
Exhaust port duration	190 [CA]
Scavenging ports	130 [CA]
Exhaust system	Arrow
Fuel system and ignition	34 [mm] flat slide carburetor supported by a MAP-based PI system. Baseline CDI ignition.
Catalytic converter	Emitec-Continental 60.5 x 60 mm 200 cpsi, 40 g/ft3 Pt
Turbocharger system	GT2052_BCCW18c-72TRIM_AR050

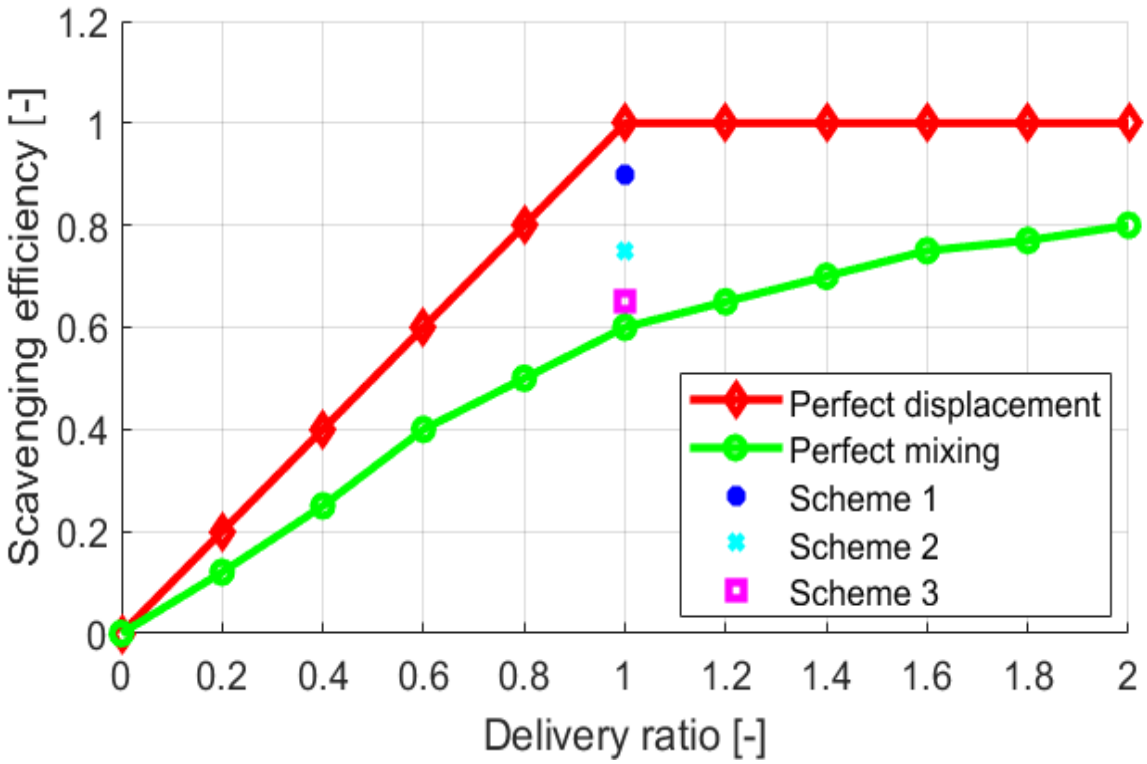

Figure 4. Plots of scavenging efficiency versus delivery ratio for different scavenging systems (Schemes 1-3) that exist in the space between the limiting cases of perfect displacement scavenging and perfect mixing scavenging. Schemes 1-3 was only available for DR=1.

2.2 Experimental set up

The engine dyno used to generate data for model validation was a water-based SF902 absorber system from Super Flow fitted with a SF833 water turbine designed for use with small high-speed engines. This dyno can be used with engines having power outputs of up to 750 kW, which is about ten times the test engine's expected output.

The torque from the dyno is measured by a calibrated strain gauge operating on a torque arm. Total error: ±0.05% of full scale which is 1000 Nm.

Repeatability: ±0.02% of full scale. The engine speed sensor at the dyno works with a pulse counter which makes it possible to measure both clockwise and counterclockwise. The counter torque in the dyno is obtained by the volumetric filling level of water in the dyno. This level can be controlled manually but in most cases the control valve is controlled by the computer to obtain constant engine speed. A weather station is included in the performance reporting. Air consumption is measured by an air turbine. The accuracy of the measurements depends on how it is installed in the air paths to the engine. A single cylinder

engine has some unsteadiness in the intake stroke. This is significantly reduced or averaged because of the volumes and pipes between the air flow turbine and the engine. This engine type is very challenging to test for several reasons. Its torque characteristics is very steep in some engine speed ranges which make the speed control for the dyno complicated between 8000-9500rpm. The major reason is that the performance impact from the tuned exhaust pipe is exhaust temperature dependent. In addition, because the piston in a two-stroke engine is in direct contact with the hot exhaust gases not only at the piston crown but also further down the ring pack, the risk of piston seizure is higher than for a four-stroke engine. Therefore, it is difficult to conduct many measurement repeats. More information can be found in [28]. Figure 5 shows a single cylinder two-stroke engine in the engine dyno during installation.

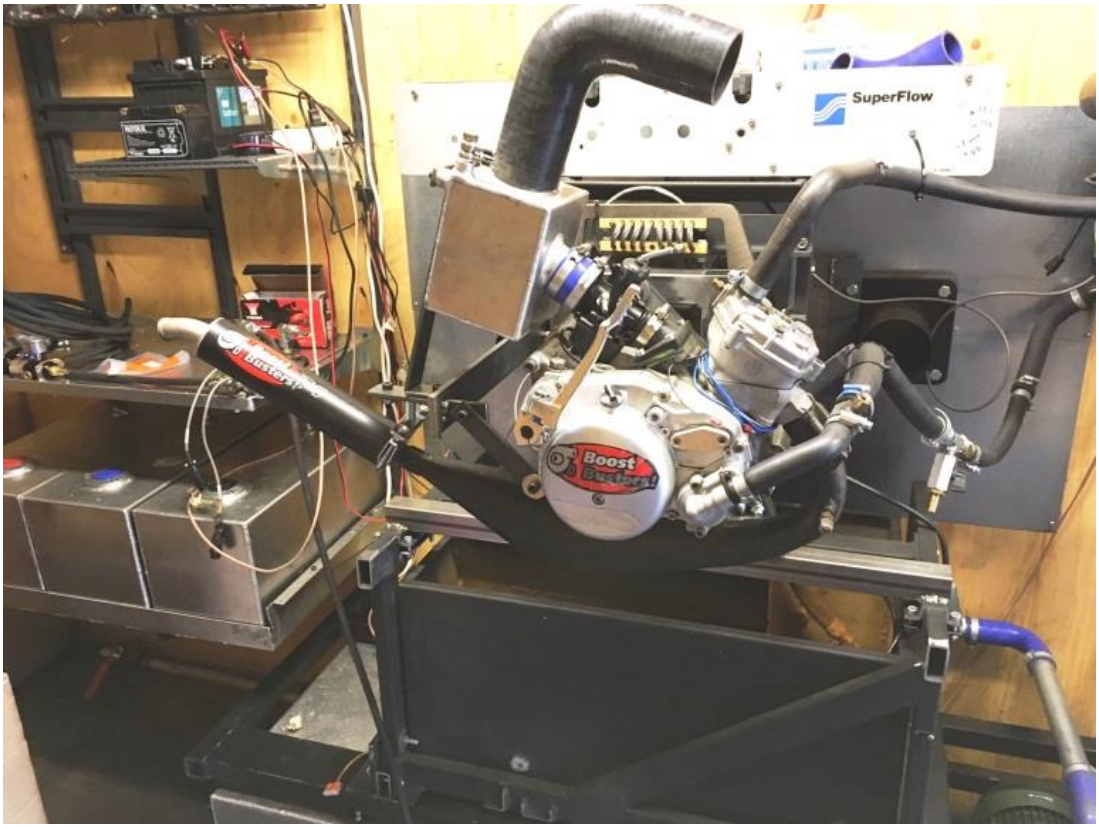

Figure 5. The two-stroke engine is installed in the engine dynamometer.

3 Results

A simplified 1D-model according to Figure 6 with constant pressure boundaries was utilized to investigate how the gas exchange system in a single cylinder, crank case scavenged two-stroke SI-engine was responding to different combinations of air- and exhaust pressures. The pressures were engine speed independent. Performance and gas

exchange properties was studied to decide which pressure combinations that should work best.

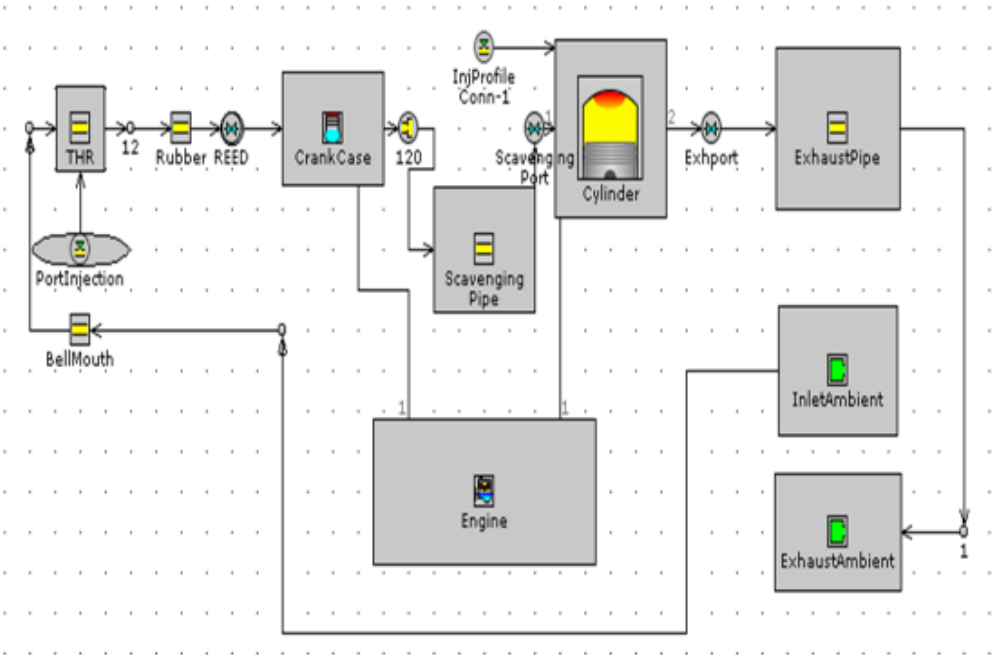

Figure 6: Schematic depiction of the simplified 1D-model with constant pressure boundaries which was used to model the different steady-state charging system scenarios.

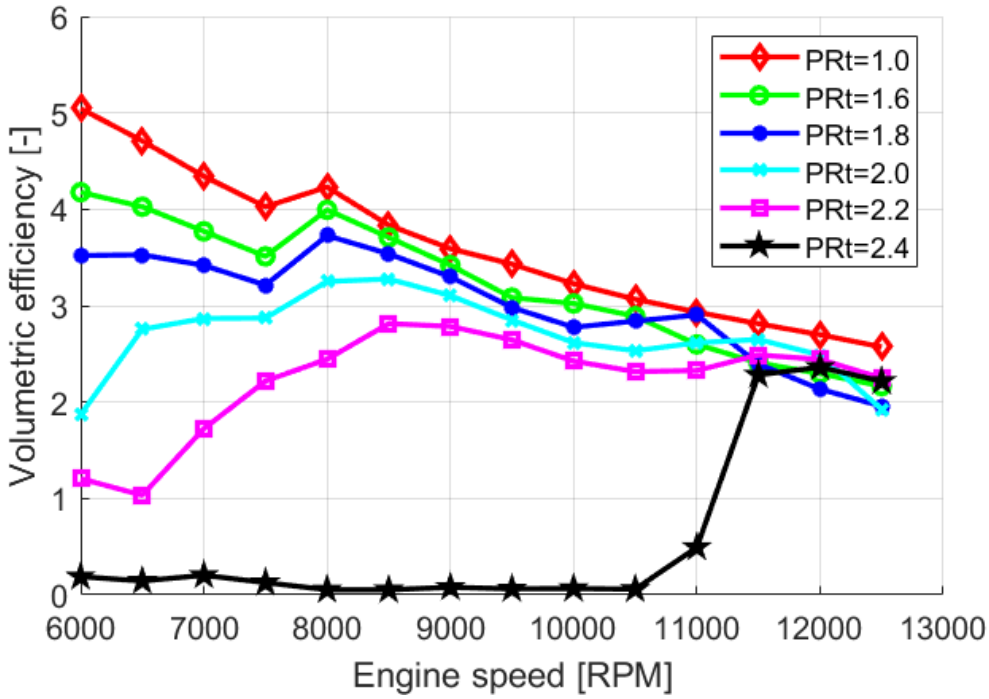

Figure 7. DR as a function of engine speed in simulations with a simplified charging system at PR c=2.0 and different exhaust pressures. The pressures are independent of the engine speed.

The compressor pressure ratio (PRc) is the pressure downstream the compressor divided with the pressure upstream the compressor. The turbine pressure ratio (PRt) is the pressure upstream the turbine divided by the pressure downstream the turbine.

Figure 7 shows that volumetric efficiency or delivery ratio (DR) was decreasing when turbine pressure ratio (PRt) is increasing from 1.0 to 2.2 but at a slow rate. Figure 8 shows trapping efficiency (TE) in the same PRt-range which will increase. Figure 9 shows power which roughly is a product of delivery ratio (DR) or volumetric efficiency and TE. At rated point at 12 000 rpm PRt=2.2 was generating maximum power output. At PRt=2.4 DR was dropping to close to zero although TE is very high but as a product the value was very low reflected in Figure 9 where power is below zero in most of the engine speed range. Therefore, it was demonstrated that it exists an optimum pressure relationship between air- and exhaust side to support the performance of the two-stroke engine during super- or turbocharged conditions.

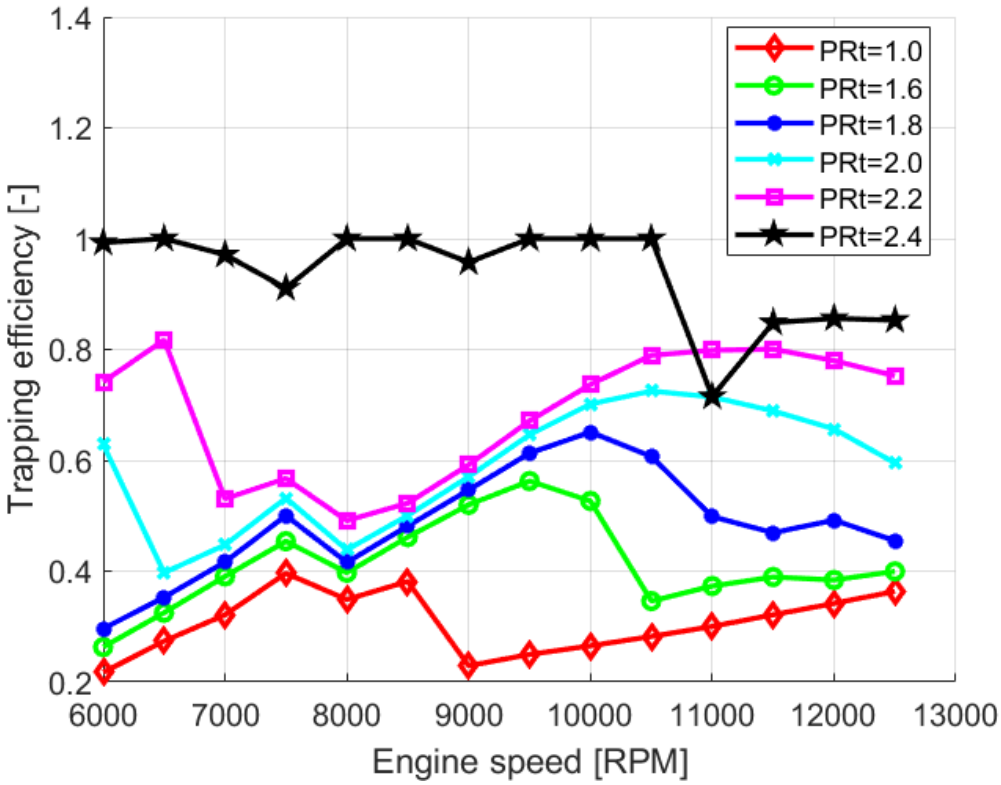

Figure 8: TE as a function of engine speed in simulations with a simplified charging system at PR c=2.0 and different exhaust pressures. The pressures are independent of the engine speed.

Besides the obvious performance impact there was thermal and combustion considerations which also depends on the pressure balance. Excessive exhaust pressures and high TE compared to DR was increasing the piston temperature and the risk of seizure. The exhaust residual content was also increasing which in turn could impact knocking. So, it was recommended to operate the engine somewhere between 2.0>PRt>2.2 although some peak power may be lost.

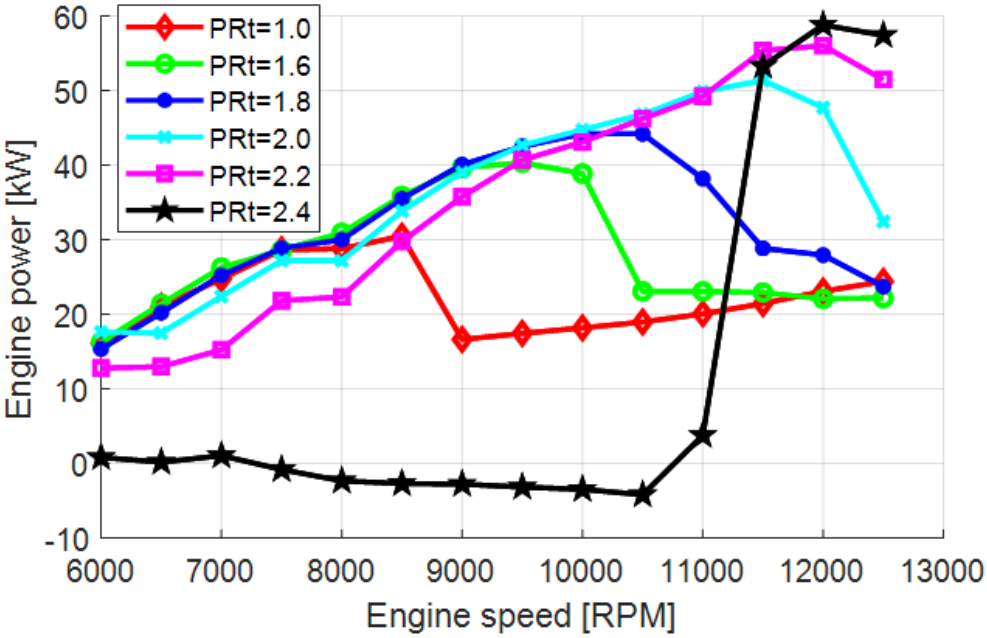

Figure 9. Engine power vs. engine speed from simulations of a simplified charging system at PRc=2 charge air pressure and different exhaust pressure ratios. The pressure boundaries were applied independently of engine speed.

The results indicate that the exhaust- and air charge pressure was in the same magnitude to support the scavenging and pressure wave dynamics in the best possible way. A mechanical driven compressor, sometimes referred to as supercharger, will not generate a corresponding rise in exhaust pressure and seems to be a bad alternative. The mechanical drive will consume shaft power which was not captured in the simplified simulations.

A turbocharger on the other hand can obtain the desired pressure balance assuming exhaust temperature, component efficiency and turbine size are combined so PRt < PRc. Please see Figure 10.

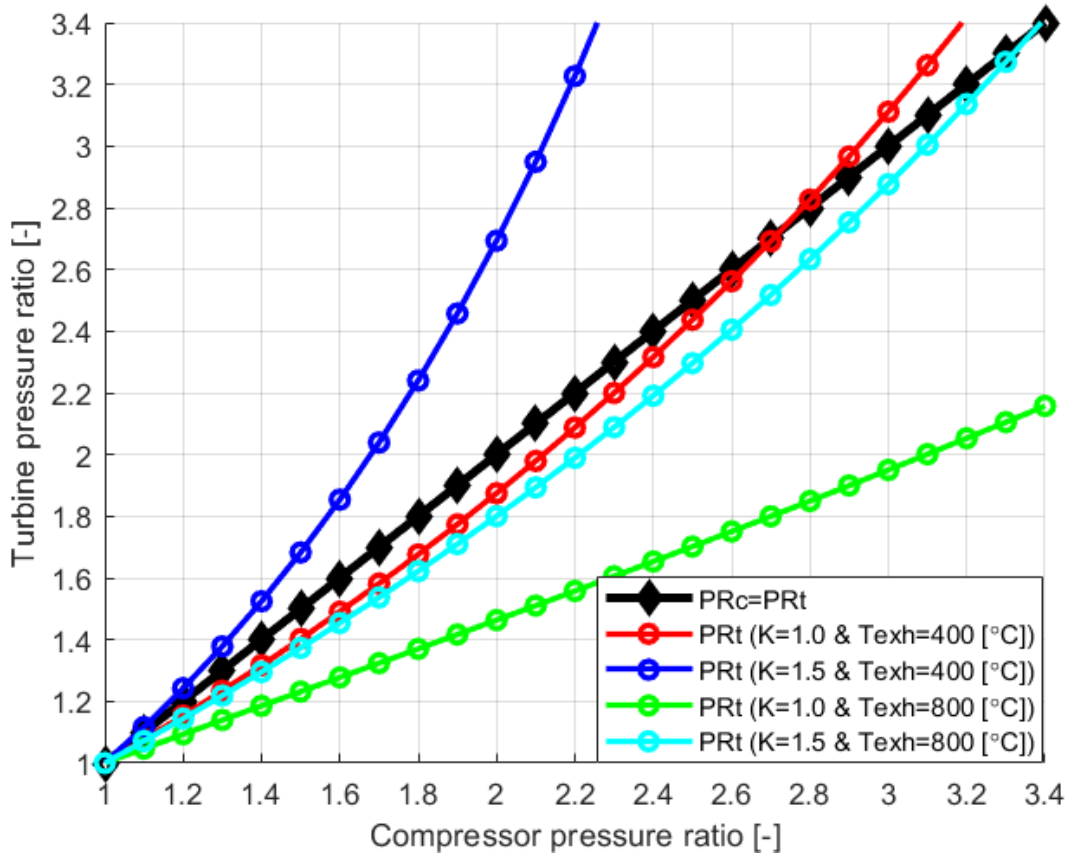

Figure 10: The relationship between turbine PR (PRt) and compressor PR (PRc) at different wastegate ratios (K), where K=1 indicates a closed wastegate. Compressor and turbine efficiencies are assumed to be 70%. Mechanical efficiency 95%.

Small engine sizes and corresponding small turbocharger components imply low stage efficiencies resulting in high exhaust pressures. The exhaust port temperature was limited to 700-750 deg C because of the aluminum piston controlling the port. Further thermal losses in the tuned exhaust pipe reduce the temperature down to 400-500 deg C at the end of the tuned exhaust pipe. According to Figure 10 this results in higher exhaust pressure. Another challenge which is not visible in Figure 10 was related to the number of cylinders. The turbine system efficiency was lower when the exhaust mass rates became more unsteady for example when the number of cylinders feeding the turbine was reduced.

TE was around 70% at most indicating that 30% of the air was leaving the engine together with the exhaust gases. Depending on how fuel was introduced in the engine also HC or unspent fuel is available in the exhaust gases. Some of the air and HC could be exothermally converted in an oxidation catalyst. This device was referred to as an afterburner and could raise the exhaust gas temperature downstream the tuned exhaust pipe from approximately 400 deg C to around 800 deg C into the turbine. The temperature increase was according to Figure 10 lower the PRt and was creating the desired conditions

for a successful charging system for the two-stroke engine. The pressure drop through the afterburner was less than 1 kPa.

The expanded 1D-model and engine experiments

The constant pressure boundary simulations were serving as a time effective way of finding the desired conditions for a charging system to support the scavenging of the two-stroke engine. The simplified simulations ran faster and there was no need for finding real charging dimensions or maps to represent a compressor or a turbine. With the simple model it also became clear what sizes of compressors and turbines were needed to enter the different simulation objects.

The more advanced model includes turbocharger objects which in term can import maps from existing units available for engine experiments. A simple afterburner object was also included which was able to convert some of the available air and HC into heat.

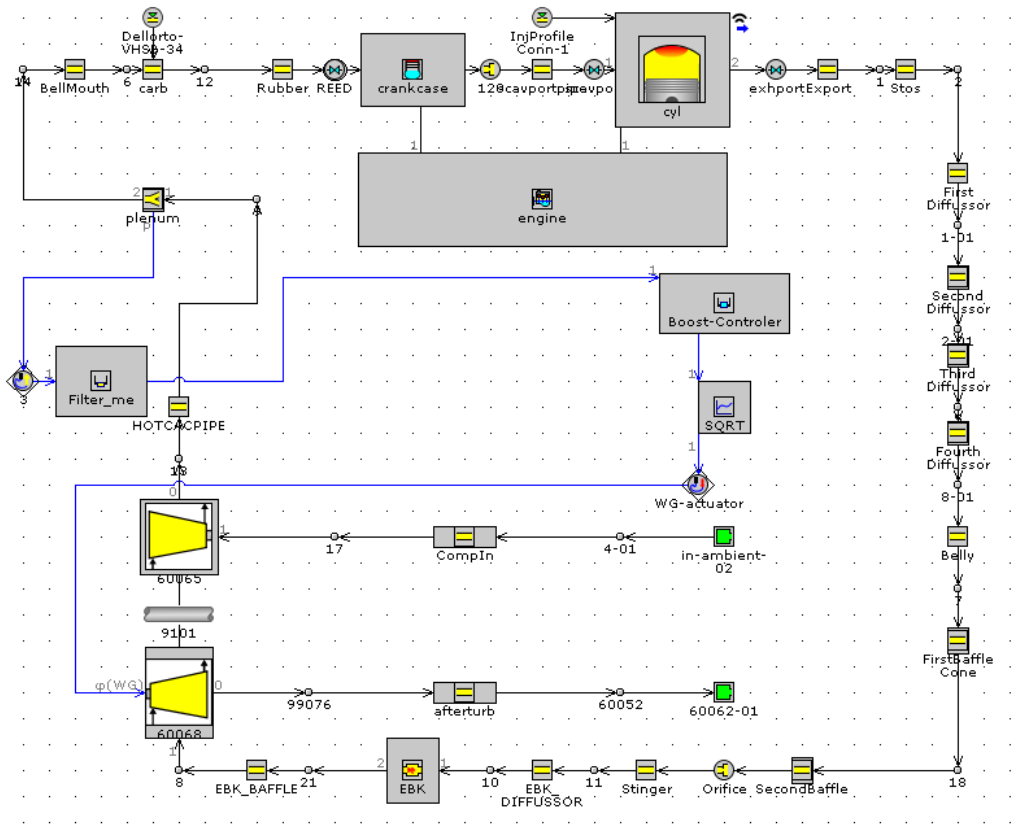

Figure 11: The schematics of 1D-model with a turbocharger object and an afterburner.

The model was able to generate extrapolated turbocharger maps to visualize how the operating curve is positioned inside each map according to Figure 12. Because the turbine

size was the most important parameter matching a two-stroke turbocharger the compressor comes with it if you do not have a very close relationship with a turbocharger supplier. Since most turbochargers in the size needed were intended for four-stroke engines they were designed for much larger wastegate-ratios (K). Therefore, the two-stroke engine only operate the compressor fairly close to the surge line.

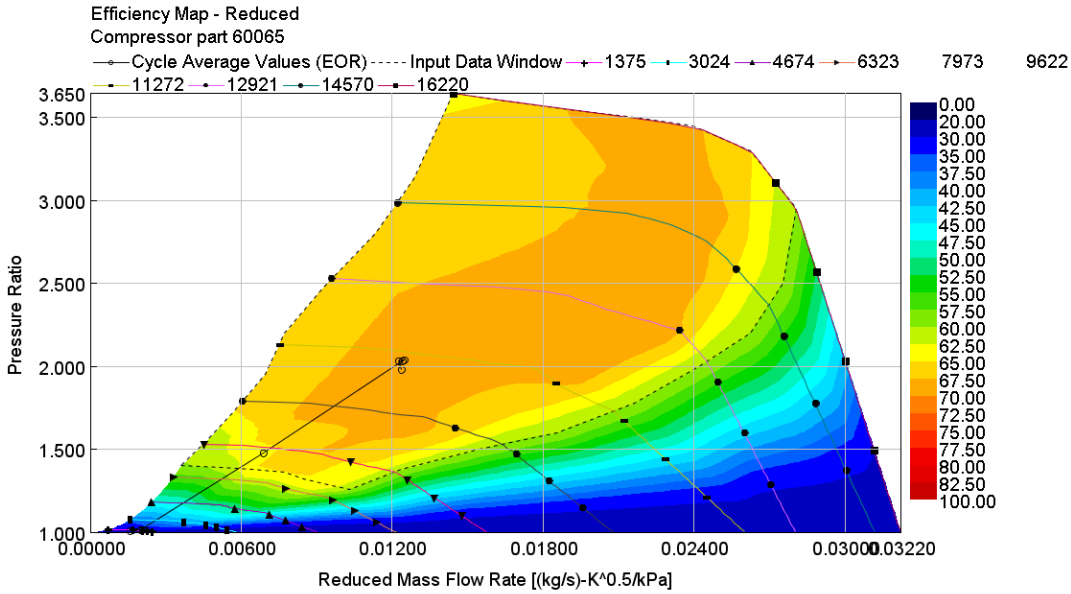

Figure 12. Simulated modified compressor map for the Garrett GT2052 turbocharger and lug line for the activated afterburner.

It was concluded that the big differences in air- and exhaust pressure would impact the combustion parameters too much from a measurable reference, so no calibration of the heat release was conducted in the simplified simulation model. However, with a fixed turbocharger in the engine experiments it was possible to measure crank resolved pressures and calibrate the heat release by comparing the resulting pressure traces demonstrated in Figure 13.

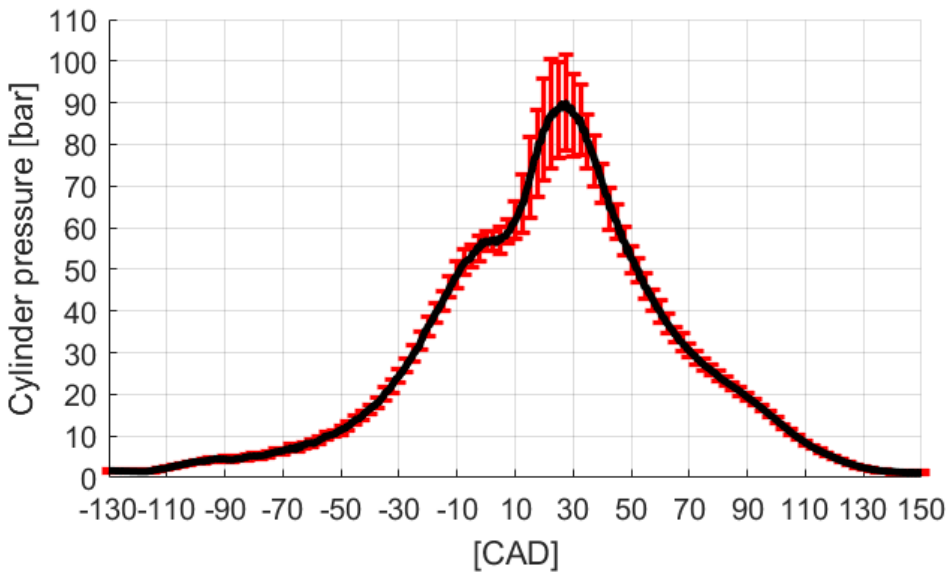

Figure 13: Experimental crank resolved cylinder pressure at 11200 rpm. Averaged pressures P exh=188 kPa and P charge=205 kPa a. Peak cylinder pressure 95 bar.

The pressure traces in the exhaust port were very important for the two-stroke engine performance and were also calibrated according to Figure 14. The pressure waves impact the particle motion in and out of the exhaust port and have a strong influence on DR and TE and hence the overall engine performance.

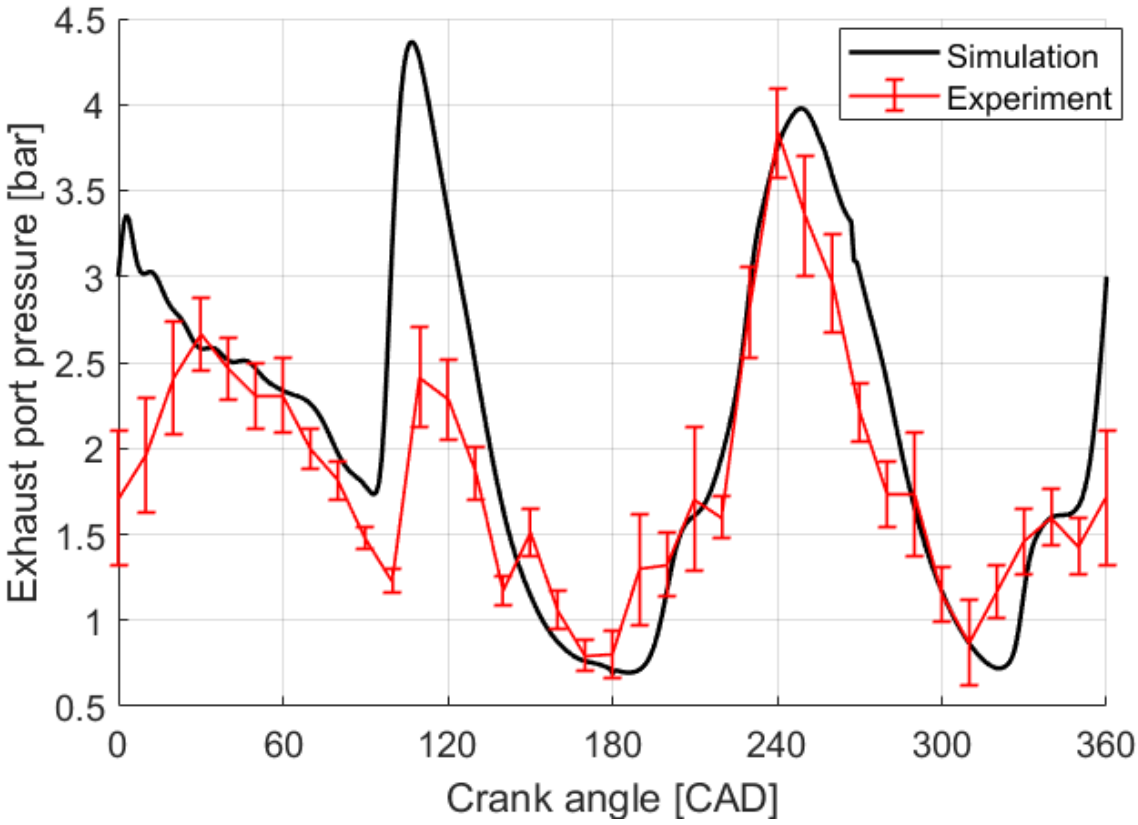

Figure 14: Measured and simulated pressure trace in the exhaust pipe close to the exhaust port at 11200 rpm.

Performance was first overpredicted before the combustion parameters in the model were calibrated to engine experiments, see Figure 15. The correlation of power between 9000-12 000 rpm was the most important range where the charging system is operating.

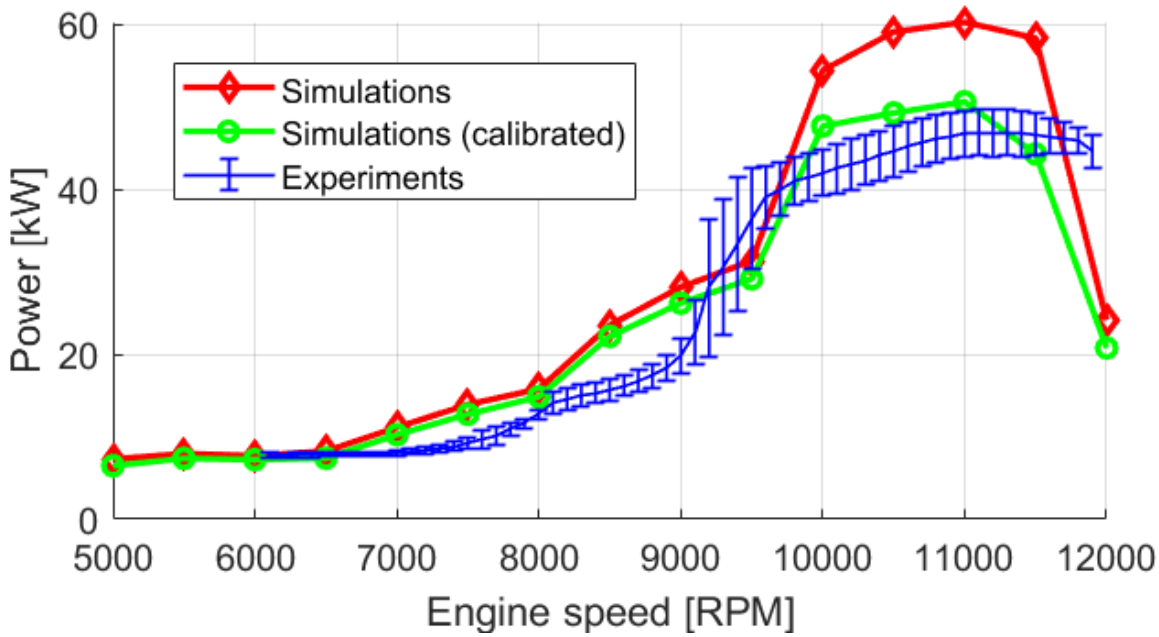

Figure 15: Measured and simulated power vs. engine speed. The adjusted calibrated power was obtained when more information was available from in-cylinder measurements

The simulations supported the experimental study in a good enough way to support the turbocharger selection and the catalytic afterburner. The catalyst model is a heater object and not based on surface chemical reactions. The catalyst conversion rate is obtained by adjusting the volume of the heater object. Figure 16 show that the temperature rise over the afterburner did happen and to the right magnitude despite some deviations in the temperature measurements. The temperature increase in the afterburner lower the turbine pressure and was increasing the fresh charge losses through the exhaust port and decrease the exhaust port temperature. Experiments have showed about 100 deg C lower exhaust port temperatures during charged conditions compared to naturally aspirated engines. The low exhaust port temperature was very favorable for the thermal loading on the piston which is considered to be the weakest mechanical component in the two-stroke engine. The emission testing needed long durations of full load testing at 50 kW level but still the engine performed very well without any seizure.

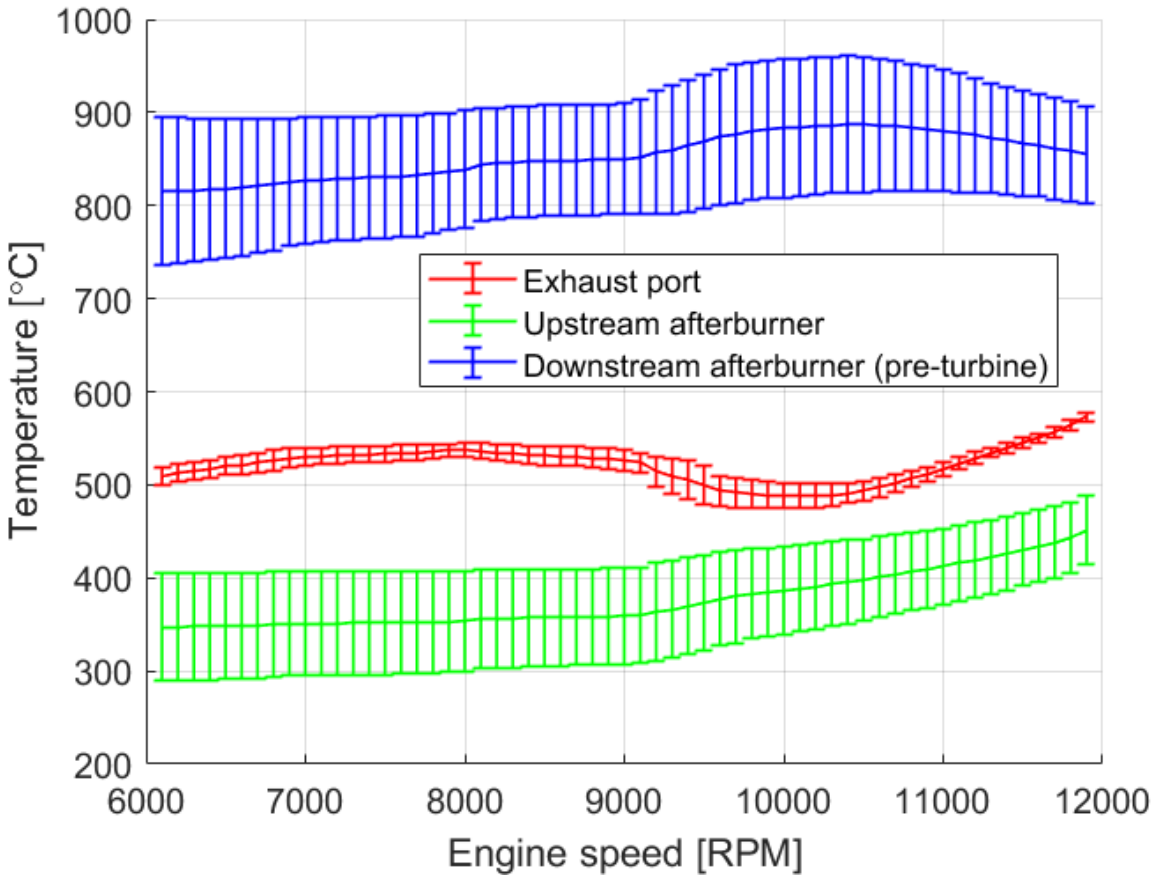

Figure 16: Exhaust temperatures through the catalytic afterburner regain exhaust temperature upstream the turbine and can also exceed the exhaust port temperature.

Due to the pressure ratio over the engine, more air was short circuited to the exhaust side, lowering the exhaust port temperature. From Figure 16, the exhaust port temperature never exceeded 600 ºC. This was about a 100 ºC lower exhaust port temperature compared to normal levels for a NA engine, even though the turbocharged engine generated twice the power. The atmospheric version of the 125cc engine will generate 700-725 º C. The exhaust port temperature is one of the most limiting factors for piston life in a two-stroke piston ported engine using aluminum pistons. Therefore, the exhaust port temperature was a very important parameter to improve the lifetime of the concept.

Much of the exhaust gas temperature was lost because of the large surface area and thermal losses in the tuned exhaust pipe. Thus, the temperature downstream of the tuned exhaust pipe and upstream of the catalytic afterburner was around 400 ºC (Figure 16). As long as this temperature is above 300 ºC, the catalytic afterburner will light off and deliver the exothermal oxidation of HCs and potentially carbon mono oxide (CO) contributing to the 800-900 ºC temperature downstream of the catalytic burner and upstream of the turbine.

In the presence of higher turbine temperatures and related lower exhaust pressures, the exhaust port temperature decreases as already outlined because of cold air and fuel leaving the engine mixed with exhaust gases. This effect increases the chemical energy available at the catalytic afterburner and further increases the turbine temperature. However, this must be limited because the specific air and fuel consumption will become high. The catalyst surface temperatures in the monolith also have limitations but will survive relatively high exhaust temperatures. Another effect was that lower exhaust temperatures in the tuned exhaust pipe lowered the pressure wave propagation speed and retuned the gas dynamic support for gas exchange. The impact was that DR and TE, and hence BMEP, are retuned towards lower engine speeds. This can be seen in both the simulations and engine experiments.

Since 1D-simulations were based on air consumption and gas exchange behavior it was important that the air consumption shows a good enough correlation between simulation and engine experiments. Figure 17 shows that the agreement in air mass flow between the engine experiments and simulations. Since PRc and PRt as shown in Figure 18 also correlates well, this indicates that DR and TE were accurately predicted by the model.

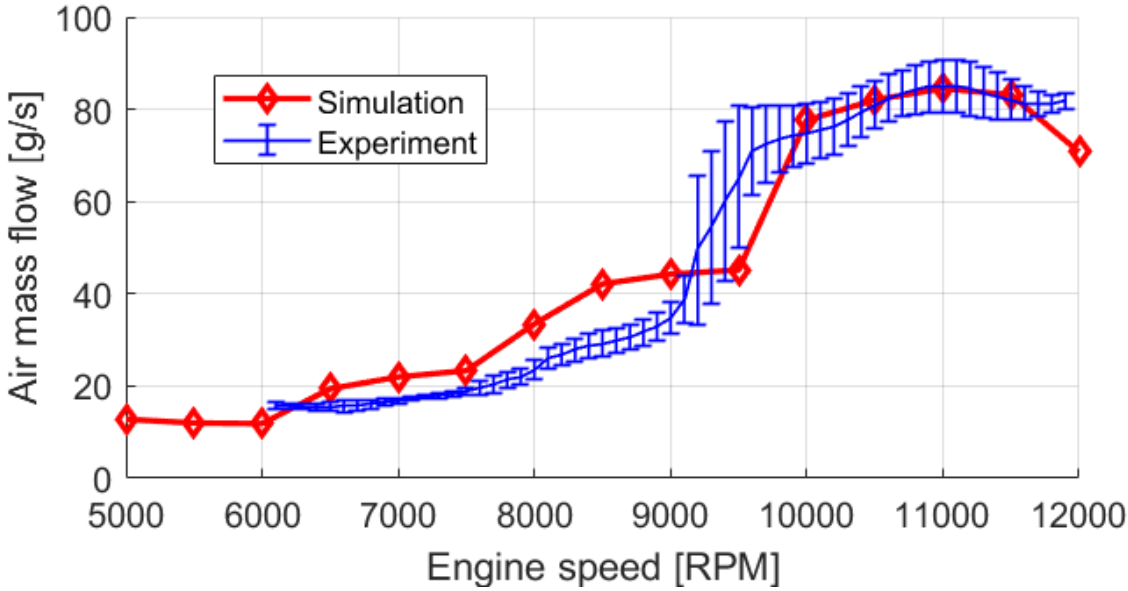

Figure 17. Experimental and simulated air mass flow vs. engine speed.

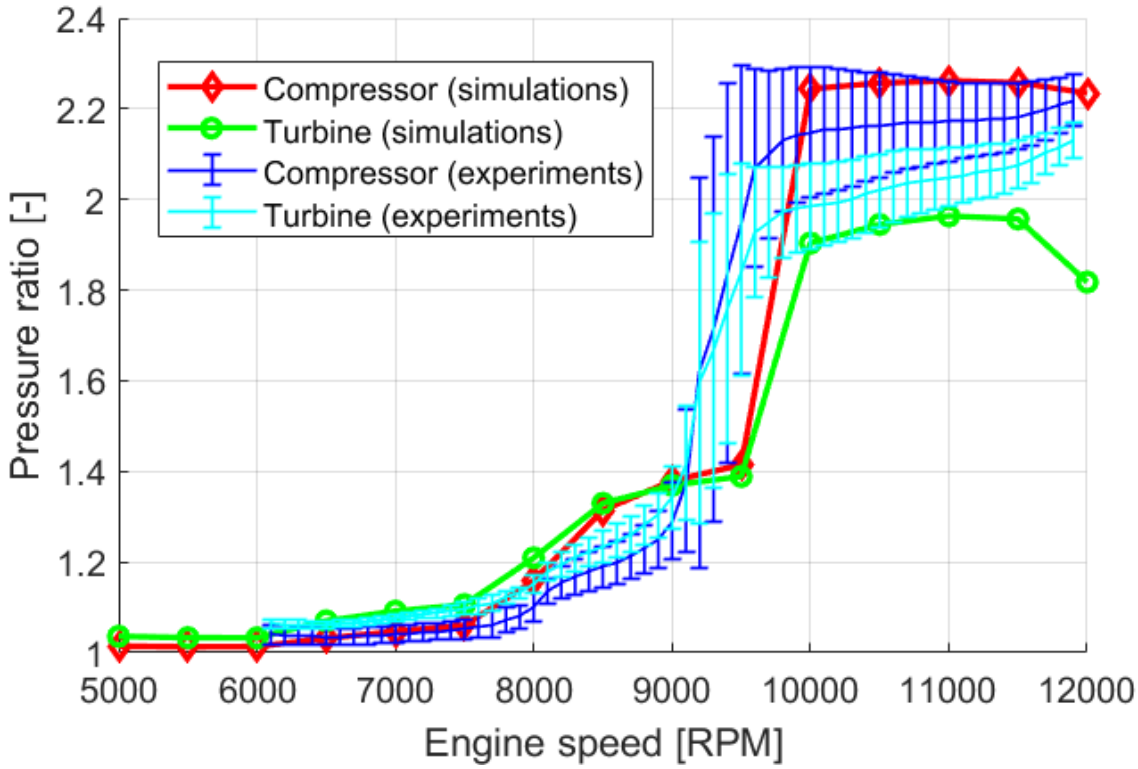

Figure 18: Experimental and simulation results for compressor- and turbine pressure ratio.

Exhaust emission testing

Two full load operation points were selected to monitor emissions for the proposed concept at two different engine speeds, i.e., 9000 and 10 000 rpm. Due to the turbocharger properties, the charging conditions changed between these operating points, as did the pressure wave pattern in the tuned exhaust pipe.

As emissions did not change much between these operating conditions, average values are presented in Table 2.

Table 2: Exhaust emissions taken downstream turbine.

Specific HC	Specific CO	Specific NOx	HD TPNOx EU6
[g/kWh]	[g/kWh]	[g/kWh]	[g/kWh]
146,8137931	734,0689655	0,198198621	0,46

E85 was selected for all engine testing because of the greater cooling properties and to improve the carbon footprint of the project. To secure the test object during the relatively long test period needed to stabilize the emission readings, the engine was calibrated to run e85 at air fuel ratio (AF)=9, which is close to stoichiometric conditions. HC and CO emissions were very high since port injection was utilized. CO is 10% which explains the very high specific numbers. However, NOx emissions were very low and below EU6 HD levels for TP-NOx. The oxidation catalyst did not alter NOx so tailpipe NOx and engine out NOx was the same. Therefore, from an exhaust emission point of view, no NOx aftertreatment would be needed. Hence, an oxidation catalyst should in principle be enough but is best used in combination with direct injection or partial direct injection to reduce CO and HC emissions. The catalytic converter or afterburner object in GT-POWER is a burner object and not a true surface chemistry device. Its size or volume was selected to obtain a certain fictive space velocity, which influences the conversion rate. The hardware related space velocity from a true catalyst will be different. The burner object converts a portion of the air and fuel lost in the exhaust during the scavenging. Since the engine model included port injection, the same A/F utilized for combustion also ends up in the exhaust gases and the burner system. The starting point for sizing the burner object is to reach about 800 °C downstream of the catalytic converter and upstream of the turbine entry. The fictive space velocity in the catalyst or afterburner object in GT-POWER was modeled to reach a turbine inlet temperature of around 800 °C. However, the metallic substrate in a real catalyst will survive up to 900 °C as shown in Figure 19.

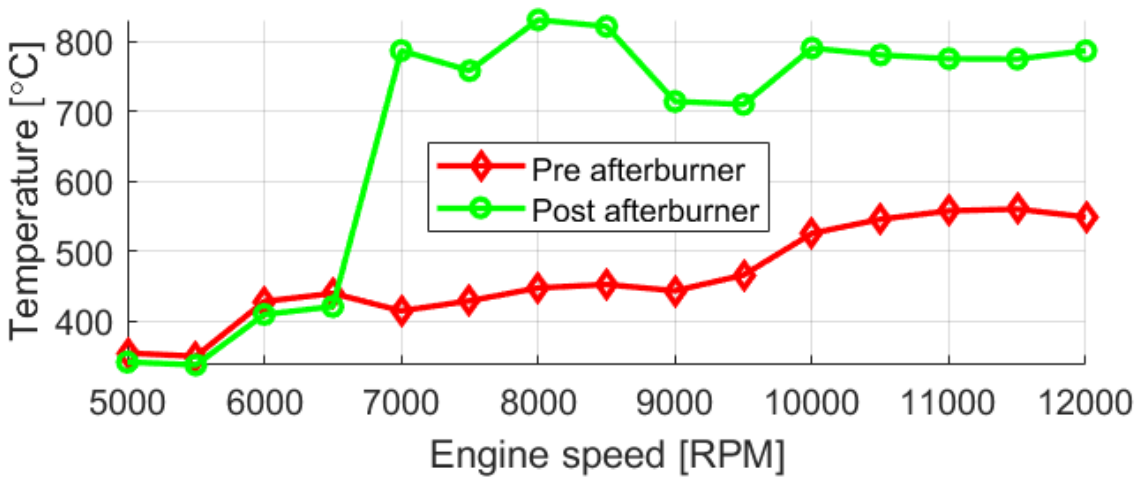

Figure 19. Simulated temperature vs. engine speed.

The simulation model used port injection. Therefore, both air and fuel were lost at the prescribed A/F during scavenging. The power developed in the catalyst/afterburner object was significant, up to 14 kW (Figure 20). However, the conversion rate needed was very small (Figure 21): around 10-15 % was sufficient or slightly higher if heat transfer is considered, which was not included in these simulations. If the conversion rate becomes too high, the substrate may reach too high a temperature and be damaged. With a port

injection system, as used in the model, all fuel necessary for generating heat in the afterburner was available. In fact, there are a surplus of fuel which cannot be utilized since this will create too high catalyst temperatures which may destroy the catalyst. So, the only control available to adjust the pre turbine temperature is the conversion rate of the catalyst.

With Direct Injection (DI), fuel can be delivered to the engine after exhaust port closing. By adjusting the timing and injection with respect to exhaust port closure the fuel portion lost to the exhaust pipe can be controlled to reach the requirements for heating up the exhaust gases.

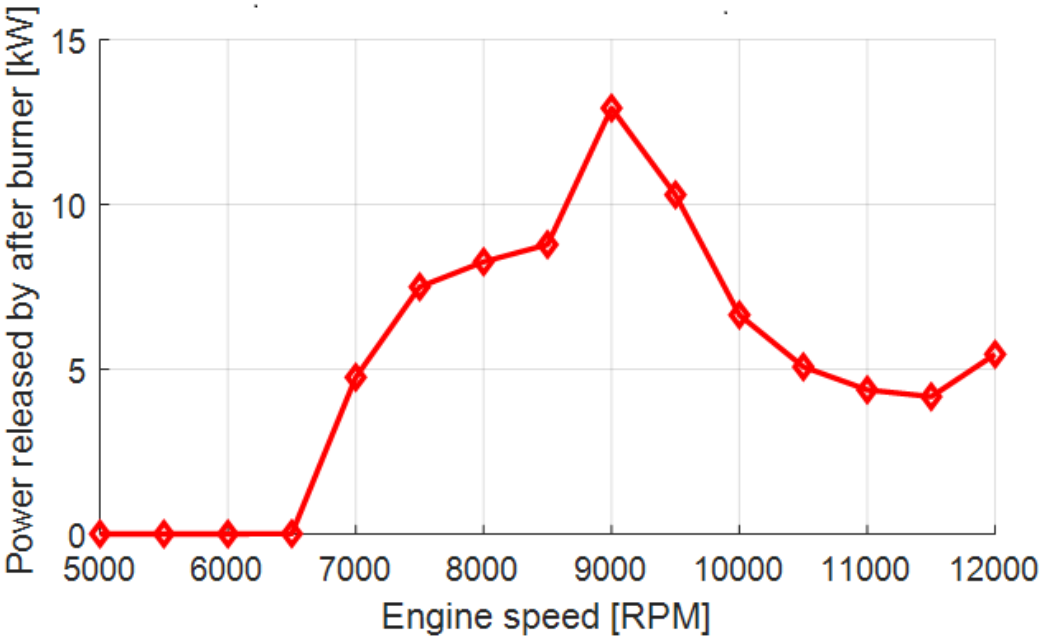

Figure 20: Desired power developed through conversion in the catalytic afterburner to obtain the needed exhaust temperatures upstream the turbine. Below 6500rpm the upstream exhaust temperature is too low for light off.

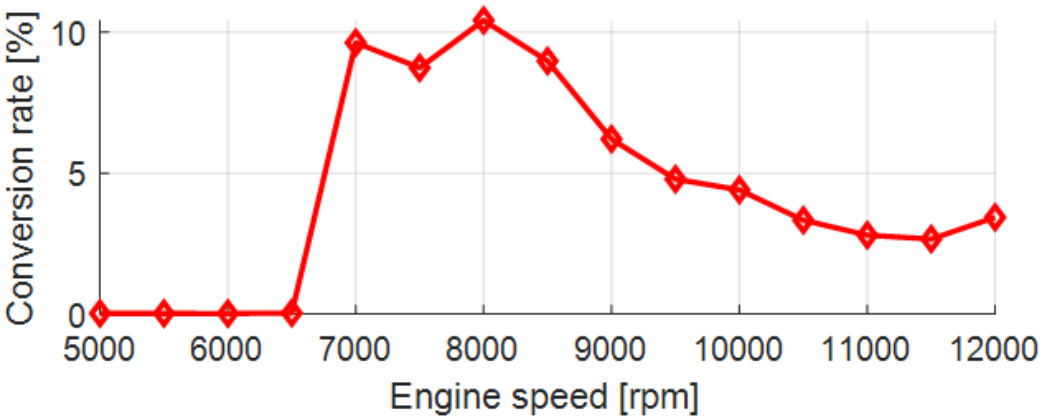

Figure 21: The catalytic afterburner conversion rate needed to meet the temperatures upstream the turbine.

4 Discussion

1D-engine simulations at different levels have shown to be a useful guide to understand the gas exchange needs for a single cylinder two-stroke engine. 1D-simulations at a refined level have also been helpful to design the specific turbocharger and afterburner system which was used during engine experiments.

The experimental engine test results showed that the proposed turbocharger system and afterburner system worked and the 125cc test engine was able to produce 50 kW. Scaled up to 425cc, the power demand of a heavy-duty REX of 150 kW should be met. A supercharger is not considered to be a good alternative since this solution does not provide the desired exhaust pressure.

The afterburner system utilizes expelled HC and air from the scavenging process which is converted to heat adding inlet turbine temperature. The increased turbine temperature makes more energy available in the turbine and hence the turbine expansion ratio and the exhaust pressure can be kept at a desired level. The conversion of HC is an appreciated contribution to lower the tailpipe HC-emissions.

It has been demonstrated that a back-up REX solution for a heavy duty BEV-application can be realized using a single cylinder crank case scavenged SI-engine with an afterburner assisted turbocharger system.

The usage of the two-stroke engine in a REX application will be engine speed limited because of how a generator is operated. The usual speed range limitations for a two-stroke engine not a problem in a REX application. The expected engine speed range will be between 9000-12000 rpm.

The correlation between experimental results may look poor compared to regular four-stroke CI-and SI-engines which are much more stable compared to two-stroke engines. One reason is the stronger coupling between exhaust- and air side because of the large port overlap. Exhaust pressure waves have a significant impact on the performance, and they are also depending on exhaust temperature dependent.

5 Contribution to the field by the author

- Proposed an alternative way of using the REX-technology as a back-up REX compared to the existing in-use REX for light duty BEV-applications.
- Exploring a compact and powerful ICE-technology to make it possible to reuse the existing electric machine in a BEV-powertrain for a cost-effective back-up REX.

- Dimensioning a turbocharger system supported by a catalytic converter upstream of the turbine able to meet the scavenging challenges from a single cylinder two-stroke engine.
- The proposed turbocharger system lowers the exhaust port temperature which improve engine life.
- Combine an exhaust after treatment system with an afterburner concept to both provide suitable turbocharger properties and improving exhaust emission conditions for a two-stroke SI-engine.

6 Future Work

For reasons of simplicity and availability, a 125cc engine with PI (Port Injection) was chosen for the simulation- and experimental analyses. The need for 150 kW in the application indicate that further work is needed to apply this technology on a larger engine.

Only a fraction of the available HC needs to be converted to reach the desired exhaust temperatures. Converting more HC and air is of course theoretically possible but too high exhaust temperatures will be generated which will destroy the monolith in the afterburner system. A better way is to introduce direct injection (DI) which reduces the expelled HC from the scavenging process.

The turbocharger used in the engine experiments was not ideal and a smaller compressor with a ball bearing system would have created a better turbocharger match.

An upscaling of the engine will be done at also adding DI (Direct Injection). The latter will make it possible to control the fuel losses during scavenging more easily and improve the operation of the catalytic afterburner system.

Symbols and acronyms

Abbreviation	Full name
DR	Delivery Ratio
SR	Scavenging Ratio
TE	Trapping Efficiency
CE	Charging Efficiency
iEGR	Internal Exhaust Gas Recirculation
SE	Scavenging Efficiency=1-iEGR
RPM	Revolutions per Minute
PRc	Pressure Ration Compressor
PRt	Pressure Ration Turbine
SI-Engine	Spark Ignited Engine
IC-Engine	Internal Combustion Engine
1D	One Dimensional
BMEP	Brake Mean Effective Pressure
IMEP	Indicative Mean Effective Pressure
BEV	Battery Electric Vehicle
REX	Range Extender
NA	Naturally Aspirated
GDI-Engine	Gasoline Direct Injection Engine
CCR	Crank Case Compression Ratio
SP	Scavenging Port
SPO	Scavenge Port Opening
SPC	Scavenge Port Closure
EP	Exhaust Port
EPO	Exhaust Port Opening
EPC	Exhaust Port Closure
IP	Inlet Port
IPO	Inlet Port Opening
IPC	Inlet Port Closure
TDC	Top Dead Center
BDC	Bottom Dead Center
CA	Crank Angle
MBT	Minor Spark Advance for Maximum Brake Torque
THB50	Crank Position for 50 % Burned Conditions
WOT	Wide Open Throttle
HC	Hydrocarbon
CO	Carbon Monoxide
NOx	Nitrogen Oxides

References

References

1. Bassett Michael, “Design of a Dedicated Range extender Engine”, SAE 2011-01-0862
2. Bassett Michael, “The Development of a Dedicated Range extender Engine”, SAE 2012-01-1002
3. Bassett Michael, “The Development of a Range Extender Electric Vehicle Demonstrator”, SAE 2013-01-1469
4. Rust Alfred, “NVH of Electric Vehicles with Range Extender”, SAE 2010-01-1404
5. Atzwanger Martin, “Two-Cylinder Gasoline Engine Concept for Highly Integrated Range Extender and Hybrid Powertrain Applications”, SAE 2010-32-0130
6. Hubmann Christian, “Single Cylinder 25kW Range Extender as Alternative to a Rotary Engine Maintaining High Compactness and NVH Performance”, SAE 2013-32-9132
7. Hubmann Christian and Gruber Stefan, “Single Cylinder 25kW Range Extender: Development for Lowest Vibrations and Compact Design Based on Existing Production Parts”
8. Ebner Andreas, “Study of Possible Range Extender Concepts with Respect to Future Emission Limits”, SAE 2010-32-0129
9. Pischinger Martin, “A Low NVH Range-Extender Application with a Small V-2 Engine- Based on a new Vibration Compensation System”, SAE 2012-32-0081
10. Mattarelli Enrico, “2-stroke Externally Scavenged Engines for Range Extender Applications”, SAE 2012-01-1022
11. Mattarelli, E., “Comparison between 2 and 4-Stroke Engines for a 30 kW Range Extender” SAE 2014-32-0114
12. Turner James, “The Lotus Range Extender Engine”, SAE 2010-01-2208
13. P. Duret IFP School, “Potential of a Production DI-Two Stroke Engine Adapted for Range Extender and Motorcycle Applications,” SAE 2017-32-0082
14. Agarwai Ashwini and Gandhi Yash, “Development of a Low Cost Production Automotive Engine for Range Extender Application for Electric Vehicles”, SAE 2016-01-1055”
15. Chubbock Stuart, “Comparative Analysis of Internal Combustion Engine and Fuel Cell Range Extender”, SAE 2016-01-1188”
16. Blair, G. P., “Design and Simulation of Two-Stroke Engines,” ISBN-156091-685-0
17. Hopkinson, B., “The Charging of Two-Cycle Internal Combustion Engines,” *Trans. NE Coast Institution. Engineers. Shipbuilders* 30, (1914): 433.
18. Janota & Watson: “Turbocharging the Internal Combustion Engine,”
19. Benson, R.S., Brandham, P.J., “A Method for Obtaining a Quantitative Assessment of the Influence of Charge Efficiency on Two-Stroke Engine Performance,” *Int. J. Mech. Sci.* 11, (1969): 303.
20. Jante, A., “Scavenging and Other Problems of Two Stroke Spark-Ignition Engines” SAE-paper No 680468 1968
21. Earnshaw, S., “On the Mathematical Theory of Sound,” *Phil. Trans. Roy*. Soc, 150, (1860): 133.
22. Mattarelli, E., “Comparison between 2 and 4-Stroke Engines for a 30 kW Range Extender” SAE 2014-32-0114
23. P. Duret IFP School, “Potential of a Production DI-Two Stroke Engine Adapted for Range Extender and Motorcycle Applications,” SAE 2017-32-0082
24. P. Nucio Energy Department Torino, “Development Through Simulation of a Turbocharged 2-stroke GDI-Engine Focused on Range Extender Application,” SAE 2017-32-0121
25. Bradbury, N., “Turbocharging a Crank Case Scavenged and Direct Injected Two Stroke Engine for Snowmobile Applications,” SAE 2006-32-0052
26. Anton, N., “Engine Optimized Turbine Design”, Doctoral Thesis in Machine Design KTH Stockholm 2019.
27. Morel, T., v2016 GT-SUITE information about code capabilities and governing equations. Gamma Technology Code Basics
28. AVL Indicative test equipment.
29. PEMS Emission test equipment.
30. Mattarelli, E., “2-Stroke Externally Scavenged Engines for Range Extender Applications,” SAE 2012-01-1022
31. Nomura, K., Nakamura, N., “Development of a New Two Stroke Engine With Poppet Valves: Toyota S2 Engine,” A New Generation of Two–Stroke Engines for the Future? P. Duret (Editor) and Editions Technip, Paris 1993, pp53-62, 27 Rue Ginoux, 75015 Paris

Appended PAPER A

Summary: This journal article describes how light duty REX technology have been developed and how a back-up REX for a heavy-duty application needs to be designed to fit into the installation of an existing HD-BEV. The identified challenges for a charging system for a two-stroke engine is addressed and an afterburner assisted turbocharger system is verified in simulations and engine experiments.

Appended PAPER B

Summary: This conference paper describes in further details the challenges associated with the gas exchange system in a two-stroke engine and why an afterburner system improves the situation. Practical limitations from the existing hardware component needed for the engine experiments are also explored.