CHALMERS
UNIVERSITY OF TECHNOLOGY

Distributed Channel Access for Control Over Known and Unknown Gilbert-Elliott Channels

Downloaded from: https://research.chalmers.se, 2024-05-02 08:58 UTC

Citation for the original published paper (version of record):
Farjam, T., Wymeersch, H., Charalambous, T. (2023). Distributed Channel Access for Control Over Known and Unknown Gilbert-Elliott Channels. IEEE Transactions on Automatic Control, 68(12): 7405-7419. http://dx.doi.org/10.1109/TAC.2023.3279902

N.B. When citing this work, cite the original published paper.

© 2023 IEEE. Personal use of this material is permitted. Permission from IEEE must be obtained for all other uses, in any current or future media, including reprinting/republishing this material for advertising or promotional purposes, or reuse of any copyrighted component of this work in other works.

This document was downloaded from http://research.chalmers.se, where it is available in accordance with the IEEE PSPB Operations Manual, amended 19 Nov. 2010, Sec, 8.1.9. (http://www.ieee.org/documents/opsmanual.pdf).

(article starts on next page)

This article has been accepted for publication in IEEE Transactions on Automatic Control. This is the author's version which has not been fully edited and content may change prior to final publication. Citation information: DOI 10.1109/TAC.2023.3279902

Distributed Channel Access for Control over Known and Unknown Gilbert-Elliott Channels

Tahmoores Farjam, Henk Wymeersch, and Themistoklis Charalambous

***Abstract*—We consider the distributed channel access problem for a system consisting of multiple control subsystems that close their loop over a shared wireless network with multiple channels subject to Markovian packet dropouts. Provided that an acknowledgement/negative-acknowledgement feedback mechanism is in place, we show that this problem can be formulated as a Markov decision process. We then transform this problem to a form that enables distributed control-aware channel access. More specifically, we show that the control objective can be minimized without requiring information exchange between subsystems as long as the channel parameters are known. The objective is attained by adopting a priority-based deterministic channel access method and the stability of the system under the resulting scheme is analyzed. Next, we consider a practical scenario in which the channel parameters are unknown and adopt a learning method based on Bayesian inference which is compatible with distributed implementation. We propose a heuristic posterior sampling algorithm which is shown to significantly improve performance via simulations.**

***Index Terms*—Wireless networked control systems, distributed channel access, Gilbert-Elliott channel, Bayesian inference, online learning.**

I. Introduction

Recent technological advancements have enabled mass production of low-power wireless sensors with high computational capabilities at a lower cost. Wireless communication plays a key role in modern control environments since adopting wireless sensors leads to scalability, flexibility, and facilitates breaking new disruptive technologies into the market [2]. The communication resources within these environments are often shared among various control loops and such systems are often referred to as wireless networked control systems (WNCSs).

Using wireless communication for information exchange in the control loops introduces several unique challenges that stem from non-negligible transmission error probability. This leads to packet dropouts which are typically modeled as an independent and identically distributed (i.i.d.) Bernoulli sequence. The impact of this phenomenon on the solution of the optimal estimation and linear quadratic Gaussian (LQG) control problem for a single loop has been investigated in seminal works [3] and [4], respectively. The i.i.d. assumption, however, corresponds to environments where path loss and small-scale fading are dominant. In industrial environments, large moving objects lead to shadow fading and burst error which cause correlated packet dropouts [5], [6]. This correlation can be approximated by modeling the communication channel as a time-homogeneous two-state Markov chain known as the Gilbert-Elliott (GE) model [7], [8]. The impact of this type of channel on a single control loop has also been studied [9]–[12].

Typically, WNCSs contain several control loops, hereon called subsystems, which communicate over a shared network to perform their individual tasks. The limited capacity of the network necessitates that only a subset of subsystems are allowed to communicate within each time slot. Devising a policy for choosing a suitable subset of subsystems for achieving the desired objective given the communication constraints is known as the scheduling or channel access problem. These policies often require solving a complex optimization problem by a central entity in the network which orchestrates channel access thus impeding scalability. In this paper, we consider the channel access problem over GE channels in the absence of a central coordinator in the network. We derive the stability conditions for our proposed distributed channel access method and also extend its application to scenarios where the underlying parameters of the GE channels are unknown.

A. Related works

The seminal work [3] investigated the effect of i.i.d. packet dropouts on Kalman filtering which showed that a critical dropout rate exists beyond which the estimation error covariance cannot be bounded. This paved the way for a plethora of works on sensor scheduling policies over ideal channels such that stability of the filter is preserved despite the intermittent arrival of data packets. For instance, the single, two, and multi-sensor scheduling problem subject to energy constraints were studied in [13], [14], and [15], [16], respectively, showing that the optimal schedule can be approximated by a periodic one. Sensor scheduling with possibility of i.i.d. packet dropouts during transmission has also been studied for bandwidth-limited systems [17]–[19] as well as systems with energy harvesting capabilities [20]–[22]. In many practical scenarios, channel states, and consequently, packet dropouts are time-correlated which motivates the use of GE channel model instead. The study of this model in WNCSs has been mainly

T. Farjam is with the Department of Electrical Engineering and Automation, School of Electrical Engineering, Aalto University, Espoo, Finland. E-mail: {name.surname@aalto.fi}.

H. Wymeersch is with the Department of Electrical Engineering, Chalmers University of Technology, Göteborg, Sweden. E-mail: henkw@chalmers.se.

T. Charalambous is with the Department of Electrical and Computer Engineering, School of Engineering, University of Cyprus, Nicosia, Cyprus. E-mail: {surname.name@ucy.ac.cy}. He is also with the Department of Electrical Engineering and Automation, School of Electrical Engineering, Aalto University, Espoo, Finland. E-mail: {name.surname@aalto.fi}.

A preliminary version of the results appeared in [1].

This work is licensed under a Creative Commons Attribution 4.0 License. For more information, see https://creativecommons.org/licenses/by/4.0/

This article has been accepted for publication in IEEE Transactions on Automatic Control. This is the author's version which has not been fully edited and content may change prior to final publication. Citation information: DOI 10.1109/TAC.2023.3279902

concerned with stability [9], [11], [23], [24] and scheduling of a single sensor for remote estimation [25], [26]. To the best of our knowledge, the only works that consider the closely related scenario of multiple GE channels are [27], [28].

The sensor scheduling problem for remote estimation is in itself an interesting and prominent problem for applications such as target tracking. Nevertheless, state estimation is also of paramount importance to feedback control. In the seminal work [4], the LQG problem for a single control loop subject to i.i.d. packet losses was considered and the certainty equivalence principle was shown to hold if instantaneous packet acknowledgements/negative-acknowledgements (ACK/NACKs) are available through an error-free feedback channel. Regarding the design of channel access policy, however, it is shown that the channel access decisions should also be independent of the control inputs for certainty equivalence to hold [29], [30]. It has been shown that minimizing the LQG cost for WNCSs with certainty equivalent controller and i.i.d. channels requires solving a mixed-integer quadratic program [31]. The high computational complexity of this problem has motivated the adoption of LQG-related cost for prioritizing data transmission in a computationally tractable manner [32], [33].

Distributed channel access methods are desirable for WNCSs since they offer higher security and allow for flexibility and scalability. Typically, due to computational intractability of the optimal scheduling solutions [14]–[19], approximate solutions are proposed as a threshold policy [15], [17], [18] or periodic schedule [14], [16] which, in theory, can be successfully implemented with time division multiple access (TDMA) or carrier sense multiple access (CSMA) schemes, respectively. Nevertheless, performance of such systems can deteriorate drastically in practice due to additional packet dropouts that happen because of the prolonged delay or collisions [34]. This has motivated novel control-aware distributed channel access methods such as Try-Once-Discard (TOD) [35] and timer-based mechanism (TBCoIL) [36] for wired networks. Unlike TOD, TBCoIL is also capable of operating over wireless networks [37], and more importantly, it allows for learning the parameters of the communication channels for control-aware channel access. Applying reinforcement learning methods for learning the unknown system dynamics has a long history in the control community; see [38]. Such methods have also been applied for near-optimal sensor scheduling over channels with known i.i.d. packet dropout rates [18], [39] or for learning the unknown dropout rates [37]. In the closest settings to us, a centralized method for learning of the channel statistics and scheduling over GE channels have been proposed in [27], where the variations of channel states are assumed to be fully observable.

B. Main contributions

In this paper, we consider a WNCS consisting of multiple subsystems and multiple GE channels without a central scheduling unit for coordinating channel access. The limited communication resources are such that only a subset of sensors can utilize the shared network to communicate with their corresponding estimator. We first show that despite the partial observations of the channel states the optimal scheduling problem in the LQG sense can be formulated as an MDP. To the best of our knowledge, this is the first time that multiple partially observable GE channels have been considered in WNCSs and such a formulation is provided. The scenario closest to ours is investigated in [27], where the state variations of wireless links are assumed to be identical for all subsystems, thereby resulting in full observations. For distributed control-aware channel access, we then utilize the concept of cost of information loss (CoIL), originally introduced in [33], and show that the resulting priority measure can be utilized in TBCoIL. More specifically, the resulting priority measure for minimizing the stage cost can be calculated by each sensor individually and without requiring any explicit information exchange between them which enables distributed channel access with TBCoIL. We then derive the conditions under which implementing TBCoIL is guaranteed to stabilize the system. The framework used for stability analysis is inspired by a work done on protocols with redundant data transmission [40], but our method significantly differs from the original work [40] and also seminal works [3], [4], [9].

Operation of TBCoIL assumes knowledge of the parameters of the underlying GE model. This can be restrictive in practice and thus we relax this assumption by adopting a Bayesian framework [41] for learning the channel parameters. This method enables us to reduce uncertainty in the channel parameters by incorporating information that is obtained from partial observations of the channel state variation. We then propose a heuristic posterior sampling algorithm that, in addition to computational tractability, allows us to address the exploration/exploitation dilemma in a distributed and control-aware manner through TBCoIL.

C. Organization and notation

The remainder of the paper is organized as follows. In Section II, we provide the system model and the necessary preliminaries. In Section III, we provide the MDP formulation of the channel access problem and propose a distributed solution and establish the stability conditions. The adopted Bayesian framework for learning the GE channel parameters is described in Sections IV and the proposed learning algorithm is presented therein. In Section V, we numerically evaluate the performance of the proposed methods and finally we draw conclusions and discuss future directions in Section VI.

Notation: $\mathbb{Z}_{\geq 0}$ ($\mathbb{Z}_{>0}$) denotes the set of nonnegative (positive) integers. The transpose, inverse, and trace of a square matrix X are denoted by X^{T}, X^{-1}, and $\mathrm{tr}(X)$, respectively, while the notation $X \succeq 0$ ($X \succ 0$) means that matrix X is positive semi-definite (definite). $\mathbb{E}\{\cdot\}$ represents the expectation of its argument and $\mathbb{P}\{\cdot\}$ denotes the probability of an event. $f^n(\cdot)$ is the n-fold composition of $f(\cdot)$, with the convention that $f^0(X)=X$. The Euclidean norm of a vector x is denoted by $\|x\|$ and $\sigma_{\max}(X)$ denotes the spectral radius of a matrix X. The n by n identity matrix is represented by I_n. $\mathbf{1}_{n\times p}$ and $\mathbf{0}_{n\times p}$ present an all-one and all-zero n by p matrix, respectively. Finally, the cardinality of a set $\mathcal{X}$ is denoted by $|\mathcal{X}|$.

This work is licensed under a Creative Commons Attribution 4.0 License. For more information, see https://creativecommons.org/licenses/by/4.0/

This article has been accepted for publication in IEEE Transactions on Automatic Control. This is the author's version which has not been fully edited and content may change prior to final publication. Citation information: DOI 10.1109/TAC.2023.3279902

II. System Model and Preliminaries

The layout of the considered WNCS is depicted in Fig. 1. We consider multiple subsystems with decoupled dynamics share a multi-channel wireless network for information exchange between their sensor and controller. The detailed model of the involved components is described in the following.

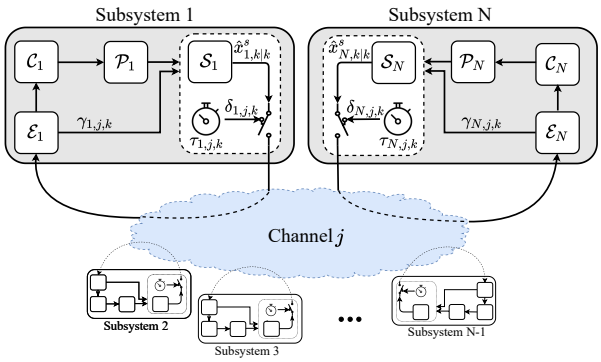

Fig. 1. Example of the WNCS layout with N subsystems competing to access a shared channel j. $\mathcal{P}_i$ represents the plant of subsystem i, with $\mathcal{S}_i$, $\mathcal{E}_i$, and $\mathcal{C}_i$ being its sensor, estimator and controller, respectively. Note that the timer is embedded in the sensor block.

A. Local processes and measurements

Let $\mathcal{N}$ denote the index set of subsystems with $|\mathcal{N}| = N$. Each subsystem $i \in \mathcal{N}$ is modeled by a linear time-invariant process as follows:

$$x_{i,k+1} = A_i x_{i,k} + B_i u_{i,k} + w_{i,k}, \tag{1a}$$
$$y_{i,k} = C_i x_{i,k} + v_{i,k}, \tag{1b}$$

where $x_{i,k} \in \mathbb{R}^{n_i}$, $y_{i,k} \in \mathbb{R}^{p_i}$, and $u_{i,k} \in \mathbb{R}^{m_i}$ are the local states, output, and control input at time k, respectively. A_i and C_i are the system and observation matrices, respectively, and we assume the open-loop dynamics are unstable to avoid trivial problems, i.e., $\sigma_{\max}(A_i) > 1$. The initial state, process disturbance, and measurement noise, denoted by $x_{i,0}$, $w_{i,k}$, and $v_{i,k}$, respectively, are assumed to be uncorrelated zero-mean Gaussian random variables with respective covariances $X_{i,0} \succeq 0$, $W_i \succeq 0$, and $V_i \succ 0$.

We assume that *smart sensors* with sufficient memory and computational capacity take the measurements (1b). This allows each sensor to run a local Kalman filter to compute the minimum mean square error (MMSE) estimate of the state which is to be transmitted to the corresponding estimator. This setup is commonly used for remote estimation since it improves performance by resulting in a smaller error covariance at the estimator [42]. Let $\mathcal{Y}_{i,k} = \{y_{i,0}, \dots, y_{i,k}\}$ be the history of measurements at smart sensor for subsystem $i \in \mathcal{N}$ and define

$$\hat{x}^s_{i,k|k-1} \triangleq \mathbb{E}\{x_{i,k}|\mathcal{Y}_{i,k-1}\},$$
$$\hat{x}^s_{i,k|k} \triangleq \mathbb{E}\{x_{i,k}|\mathcal{Y}_{i,k}\},$$

as the *a priori* and *a posteriori* state estimates, respectively, and define

$$P^s_{i,k|k-1} \triangleq \mathbb{E}\{(x_{i,k} - \hat{x}^s_{i,k|k-1})(x_{i,k} - \hat{x}^s_{i,k|k-1})^{\mathrm{T}}|\mathcal{Y}_{i,k-1}\},$$
$$P^s_{i,k|k} \triangleq \mathbb{E}\{(x_{i,k} - \hat{x}^s_{i,k|k})(x_{i,k} - \hat{x}^s_{i,k|k})^{\mathrm{T}}|\mathcal{Y}_{i,k}\},$$

as the *a priori* and *a posteriori* error covariance at the smart sensor, respectively. All these are determined by the standard Kalman filter equations. We assume that for all $i \in \mathcal{N}$ the pair (A_i, C_i) is observable, and the pair $(A_i, W_i^{1/2})$ is controllable. As a result, the steady-state value of the *a posteriori* error covariance, i.e., $P^s_{i,k|k}$ for $k \to \infty$, exists and we denote it by $\overline{P}_i$ [43, Ch. 5, p. 110]. Since convergence to steady-state occurs at an exponential rate, we can safely assume that the local Kalman filter has already entered steady-state [18], [27], [39], [44]. Therefore, at each time k, the generated data packet at the sensor contains $\hat{x}^s_{i,k|k}$ which has error covariance $\overline{P}_i$.

B. Communication channels

Let $\mathcal{M}$ denote the index set of the available channels with $|\mathcal{M}| = M$ and define

$$\delta_{i,j,k} = \begin{cases} 1, & \text{if } i \text{ transmits } \hat{x}^s_{i,k|k} \text{ on channel } j, \\ 0, & \text{otherwise.} \end{cases} \tag{2}$$

Since the wireless links are unreliable, transmission of sensor i on channel j at time k, i.e., $\delta_{i,j,k} = 1$, might be unsuccessful. We assume that each subsystem can listen to each of the M channels simultaneously. We further assume that the network protocol supports packet ACK/NACKs and that they are guaranteed to be received by the transmitter [19], [45]. Let $\gamma_{i,j,k} \in \{0, 1\}$ correspond to this such that $\gamma_{i,j,k} = 1$ if $\delta_{i,j,k} = 1$ and the data packet is successfully received; otherwise, $\gamma_{i,j,k} = 0$. In addition, to represent whether the estimator i receives the data packet at k, we define

$$\theta_{i,k} = \begin{cases} 1, & \text{if } \sum_{j\in\mathcal{M}} \gamma_{i,j,k} = 1, \\ 0, & \text{otherwise.} \end{cases} \tag{3}$$

We assume that one slot is sufficient for conveying all the information from the sensor to the estimator and at any time slot k, each subsystem occupies one channel at most, i.e.,

$$\sum_{j\in\mathcal{M}} \delta_{i,j,k} \leq 1, \quad \forall i \in \mathcal{N}, \forall k \in \mathbb{Z}_{\geq 0}. \tag{4}$$

Furthermore, we impose the following constraint on the channel access decisions to ensure collision-free transmission

$$\sum_{i\in\mathcal{N}} \delta_{i,j,k} \leq 1, \quad \forall j \in \mathcal{M}, \forall k \in \mathbb{Z}_{\geq 0}. \tag{5}$$

The effects of state quantization and transmission delays are considered negligible and are thus ignored henceforth.

Fig. 2 depicts the two-state Markov chain corresponding to the GE channel model considered here. Let $c_{i,j,k} \in \{G, B\}$ denote the (possibly hidden) state of the wireless link at k which can be either *good* or *bad* denoted by G and B, respectively. Then, data transmission over a link ($\delta_{i,j,k} = 1$) is successful ($\gamma_{i,j,k} = 1$) if the link is in good state ($c_{i,j,k} = G$), otherwise the data packet is dropped. The quality of each link

This work is licensed under a Creative Commons Attribution 4.0 License. For more information, see https://creativecommons.org/licenses/by/4.0/

This article has been accepted for publication in IEEE Transactions on Automatic Control. This is the author's version which has not been fully edited and content may change prior to final publication. Citation information: DOI 10.1109/TAC.2023.3279902

is associated with the failure rate and recovery rate defined as

$$p_{i,j} = \mathbb{P}\{c_{i,j,k} = B | c_{i,j,k-1} = G\}, \tag{6a}$$
$$q_{i,j} = \mathbb{P}\{c_{i,j,k} = G | c_{i,j,k-1} = B\}, \tag{6b}$$

respectively.

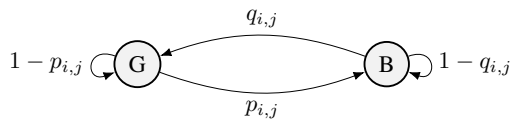

Fig. 2. The two-state Markov chain of the GE channel model.

In case the channel state is not observed at a given time k, the sensor can still maintain a *belief* of the channel being G at the next time step. The evolution of the belief is given by

$$b_{i,j,k+1} = \begin{cases} 1-p_{i,j}, & \text{if } \delta_{i,j,k}=1 \text{ and } \gamma_{i,j,k}=1, \\ q_{i,j}, & \text{if } \delta_{i,j,k}=1 \text{ and } \gamma_{i,j,k}=0, \\ b_{i,j,k}(1-p_{i,j}) + (1-b_{i,j,k})q_{i,j}, & \text{otherwise.} \end{cases} \tag{7}$$

When the channel state is not observed consecutively, the belief monotonically converges to the stationary probability of the channel state being G, which is given by

$$b_{i,j,\infty} = \frac{q_{i,j}}{p_{i,j}+q_{i,j}}. \tag{8}$$

C. Control and estimation

We choose the standard quadratic cost over the infinite horizon as the performance metric which is given by

$$J_\infty = \lim_{K\to\infty} \frac{1}{K}\mathbb{E}\left\{\sum_{k=0}^{K-1}\sum_{i\in\mathcal{N}}\left(x_{i,k}^{\mathrm{T}}Q_i x_{i,k} + u_{i,k}^{\mathrm{T}}R_i u_{i,k}\right)\right\}, \tag{9}$$

where $Q_i \succeq 0$ and $R_i \succ 0$ are weighting matrices of appropriate dimensions. We assume that the channel access decisions are independent of the control inputs thus guaranteeing that the certainty equivalence principle holds [32]. As it will become apparent in the following sections, our channel access policies indeed satisfy this assumption. Therefore, the optimal controller is linear and given by

$$u_{i,k} = L_{i,\infty}\hat{x}_{k|k}, \tag{10}$$

where $L_{i,\infty}$ is the optimal feedback gain determined by

$$L_{i,\infty} = -(B_i^{\mathrm{T}}\Pi_{i,\infty}B_i + R_i)^{-1}B_i^{\mathrm{T}}\Pi_{i,\infty}A_i, \tag{11}$$

where $\Pi_{i,\infty}$ is the positive semi-definite solution of discrete-time algebraic Riccati equation (DARE)

$$\Pi_{i,\infty} = A_i^{\mathrm{T}}\Pi_{i,\infty}A_i + Q_i - L_{i,\infty}^{\mathrm{T}}(B_i^{\mathrm{T}}\Pi_{i,\infty}B_i + R_i)L_{i,\infty}. \tag{12}$$

By making the common assumption that the actuation links are perfect [21], [29]–[33] and based on the assumption that the pairs (A_i, B_i) and $(A_i, Q_i^{1/2})$ are controllable and observable, respectively, the positive semi-definite solution of (12) always exists [46, Ch. 6]. Let $\hat{x}_{i,k|k} \triangleq \mathbb{E}\{x_{i,k}|\mathcal{I}_{i,k}\}$ denote the *a posteriori* state estimate provided by the estimator at the controller side. The information pattern can be described as

$$\mathcal{I}_{i,k}=\{u_{i,0},\ldots,u_{i,k-1},\theta_{i,0},\ldots,\theta_{i,k},\hat{x}_{i,0|0}^s\theta_{i,0},\ldots,\hat{x}_{i,k|k}^s\theta_{i,k}\}, \tag{13}$$

i.e., the successfully received estimates from the sensor and the past applied inputs. Furthermore, the estimator can infer the time elapsed since the most recent successful packet reception which is defined by

$$t_{i,k} = \min\{\kappa \geq 0 : \theta_{i,k-\kappa} = 1\} \tag{14}$$

Then, the computations at the estimator can compactly be written as

$$\hat{x}_{i,k|k} = (A_i + B_iL_{i,\infty})^{t_{i,k}}\hat{x}_{i,k-t_{i,k}|k-t_{i,k}}^s, \tag{15}$$
$$P_{i,k|k} = h_i^{t_{i,k}}(\overline{P}_i), \tag{16}$$

where $P_{i,k|k} \triangleq \mathbb{E}\{(x_{i,k}-\hat{x}_{i,k|k})(x_{i,k}-\hat{x}_{i,k|k})^{\mathrm{T}}|\mathcal{I}_{i,k}\}$ denotes the estimation error covariance at the estimator and the Lyapunov operator h_i is defined as $h_i(X) \triangleq A_iXA_i^{\mathrm{T}} + W_i$.

Due to optimality of the certainty equivalent controller and separation of its design from the channel access decisions, the problem for obtaining the optimal channel access scheme for minimizing (9) can be formulated as Problem 1.

Problem 1.

$$\begin{aligned} \min_{\Delta_1,\Delta_2,\ldots} \quad & J_\infty, \\ \textit{subject to} \quad & (4), (5), \end{aligned} \tag{17}$$

where Δ_k is a binary matrix that includes all the optimization variables at time k, i.e.,

$$\Delta_k \triangleq \begin{bmatrix} \delta_{1,1,k} & \ldots & \delta_{N,1,k} \\ \delta_{1,2,k} & \ldots & \delta_{N,2,k} \\ \vdots & & \vdots \\ \delta_{1,M,k} & \ldots & \delta_{N,M,k} \end{bmatrix}. \tag{18}$$

D. Cost of Information Loss (CoIL)

The concept of CoIL was introduced in [33] to capture the impact of the loss of information of a subsystem on the cost of the entire system. Define $E_{i,k}^0$ as the cost of subsystem i in case it does not receive any data at k; similarly, $E_{i,k}^1$ is the cost when its data packet is successfully received. The CoIL for subsystem i at time k is defined as

$$\mathrm{CoIL}_{i,k} \triangleq E_{i,k}^0 - E_{i,k}^1. \tag{19}$$

This concept can be utilized for solving the optimal channel access problem. Let $\mathcal{F}_k \subseteq \mathcal{N}$ denote the set of subsystems that transmit their data packet at k and $\overline{\mathcal{F}}_k \triangleq \mathcal{N} \setminus \mathcal{F}_k$. Assuming perfect communication channels and one-step horizon, the expected value of the stage cost, denoted by J_k, can be written as

$$\begin{aligned} \mathbb{E}\{J_k|\mathcal{F}_k\} &= \sum_{i\in\overline{\mathcal{F}}_k} E_{i,k}^0 + \sum_{i\in\mathcal{F}_k} E_{i,k}^1 \\ &= \sum_{i\in\mathcal{N}} E_{i,k}^0 + \sum_{i\in\mathcal{F}_k}\left(E_{i,k}^1 - E_{i,k}^0\right) \\ &= \sum_{i\in\mathcal{N}} E_{i,k}^0 - \sum_{i\in\mathcal{F}_k}\mathrm{CoIL}_{i,k}. \end{aligned} \tag{20}$$

This work is licensed under a Creative Commons Attribution 4.0 License. For more information, see https://creativecommons.org/licenses/by/4.0/

This article has been accepted for publication in IEEE Transactions on Automatic Control. This is the author's version which has not been fully edited and content may change prior to final publication. Citation information: DOI 10.1109/TAC.2023.3279902

Since the first term in the last line of (20) is independent of the channel access decisions, minimizing the cost is equivalent to finding $\mathcal{F}_k$ such that the last term is maximized.

E. Timer-based mechanism

Inspired by the celebrated result for relay selection in wireless cooperative networks [47], the timer-based mechanism was adopted and modified in [36] for providing distributed channel access in Networked Control Systems (NCSs). Although the original mechanism was developed for networks with a single perfect shared channel, its application was later extended to WNCSs with multiple lossy channels [37]. Suppose that each subsystem is equipped with M independent timers, i.e., a separate timer for each channel. At the beginning of each transmission slot k, subsystems set their timers and start the countdown to zero while being in listening mode. The timer values are given by

$$\tau_{i,j,k} = \frac{\lambda_j}{m_{i,j,k}}, \tag{21}$$

where λ_j is a constant specific to channel $j \in \mathcal{M}$ but is identical for all i, and the local cost, denoted by $m_{i,j,k}$, is calculated individually for each channel. Consequently, a larger local cost corresponds to a smaller timer. For simplicity, we will assume that λ_j is the same for all channels, i.e., $\lambda_j = \lambda$ for all j. Let $\{i^*, j^*\} = \arg\min_{i,j}\{\tau_{i,j,k}\}$ represent the indices of the smallest timer at k. As this timer reaches zero, subsystem i^* switches to transmission mode and sends a flag packet on channel j^* immediately, which informs the listening subsystems to stop their timers for j^* and back off. Simultaneously, i^* stops its running timers, i.e., withdraws from competition for the other channels, and transmits its data packet on j^*. By assuming that the flag packet is always detected by all the listeners and that it has a very short duration, data transmission will be collision-free. Meanwhile, the remaining subsystems compete for the available channels until all M channels are allocated. As this time slot ends, the new timer values are determined based on the updated local cost ($m_{i,j,k+1}$) and the entire procedure is repeated in the next slot. Fig. 3 demonstrates how this mechanism works for an illustrative case of two subsystems sharing a channel at k.

The contention period can be adjusted by choosing λ as required by the communication protocol. Its value cannot be arbitrarily small though, because collision-free channel access requires that multiple timers do not expire within a shorter interval than the duration of the flag. This trade-off is addressed by fine-tuning λ for specific configurations and based on the involved control and communication parameters [36], [47]. Regarding the local cost $m_{i,j,k}$, it can be any non-zero cost which is to be defined according to a specific design objective. Defining it is a rather challenging task since it should be such that the resulting channel access decisions accomplish the prespecified objective, whilst each subsystem is able to evaluate it based on its local information. Recall that explicit information exchange between subsystems is impossible, and thus distributed channel access requires $m_{i,j,k}$ to be based on local information. In the following sections, we will specify this cost in a way that implementing the timer-based mechanism achieves the channel access objective in a distributed manner.

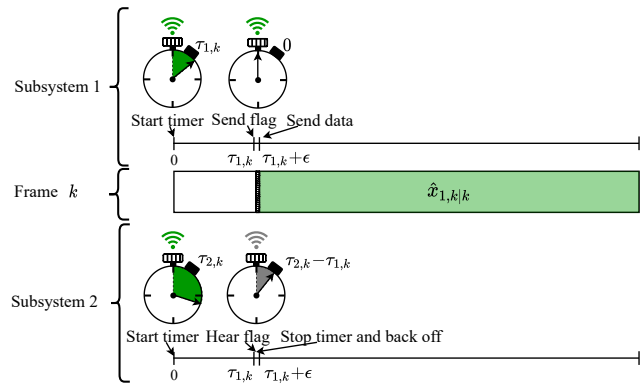

Fig. 3. Two subsystems sharing a single channel via timers at k. Subsystem 1 has a smaller timer ($\tau_{1,k}<\tau_{2,k}$) and claims the channel.

III. Distributed Channel Access over Known GE Channels

In this section, we first demonstrate that Problem 1 can be formulated as an MDP despite the partial observations of the channel state variations. Since the complexity of solving the MDP impedes tractability, we adopt the concept of CoIL to allow for solving the problem over a finite horizon in a distributed manner. The solution is obtained by implementing a specific timer setup in TBCoIL. Then we derive the conditions that guarantee the stability of the system under the resulting channel access scheme.

For notational convenience and without loss of generality, we drop the subscript j and consider $M = 1$ when necessary and then provide the generalized results by reintroducing it.

A. An MDP formulation

Problem 1 can be simplified by only considering the components of J_∞ which are influenced by the channel access decisions.

Problem 2.

$$\begin{aligned} \min_{\Delta_1,\Delta_2,\ldots} \quad & \tilde{J}_\infty, \\ \textit{subject to} \quad & (4), (5), \end{aligned} \tag{22}$$

where

$$\tilde{J}_\infty = \lim_{K\to\infty} \frac{1}{K}\mathbb{E}\left\{\sum_{k=0}^{K-1}\sum_{i\in\mathcal{N}} \operatorname{tr}\left(\Gamma_{i,\infty}P_{i,k|k}\right)\right\}, \tag{23}$$

and $\Gamma_{i,\infty} = L_{i,\infty}^T(B_i^T\Pi_{i,\infty}B_i + R_i)L_{i,\infty}$.

Proposition 1. *Problem 2 is equivalent to Problem 1.*

Proof. From [48, Lemma 6.1, Ch. 8] it follows that for the setup considered here, (9) can be written as

$$\begin{aligned} J_\infty = & \sum_{i\in\mathcal{N}} \operatorname{tr}\left(\Pi_{i,\infty}W_i\right) \\ & + \lim_{K\to\infty}\frac{1}{K}\mathbb{E}\left\{\sum_{k=0}^{K-1}\sum_{i\in\mathcal{N}} \operatorname{tr}(\Gamma_{i,\infty}P_{i,k|k})\right\}. \end{aligned} \tag{24}$$

This work is licensed under a Creative Commons Attribution 4.0 License. For more information, see https://creativecommons.org/licenses/by/4.0/

This article has been accepted for publication in IEEE Transactions on Automatic Control. This is the author's version which has not been fully edited and content may change prior to final publication. Citation information: DOI 10.1109/TAC.2023.3279902

Since the first term is independent of the channel access decisions, the assertion follows. □

In order to formulate Problem 2 as an MDP, we define two additional variables which can be inferred from the information available at the sensors. Considering $M = 1$ hereafter, we define the *holding time* as

$$t^h_{i,k} \triangleq \min\{\kappa \geq 0 : \gamma_{i,k-\kappa} = 1\}, \tag{25}$$

which describes the time elapsed since i transmitted successfully on the channel. In addition, we define the *observation time* as the time since the most recent observation of the channel state by i, i.e.,

$$t^o_{i,k} \triangleq \min\{\kappa \geq 0 : \delta_{i,k-\kappa} = 1\}. \tag{26}$$

From the definitions, we have $t^o_{i,k} \leq t^h_{i,k}$ for all k. Recall that keeping track of the belief in (7) is crucial for sensors since channel states variations are not constantly observed. Thanks to the definition of (25) and (26), this belief can now be expressed in closed form as

$$b_{i,k} = \begin{cases} \dfrac{q_i + (1-p_i-q_i)^{t^o_{i,k-1}+1} p_i}{p_i+q_i}, & t^o_{i,k-1} = t^h_{i,k-1}, \\ \dfrac{q_i - (1-p_i-q_i)^{t^o_{i,k-1}+1} q_i}{p_i+q_i}, & \text{otherwise}, \end{cases} \tag{27}$$

where the conditions indicate whether the most recently observed channel state was G or B. In case of a failed transmission, i.e., channel state being B, observation time is reset to zero, while holding time grows ($t^o_{i,k-1} \neq t^h_{i,k-1}$). Hence, $t^o_{i,k-1} = t^h_{i,k-1}$ indicates that the last transmission attempt has been successful, i.e., the most recent observed channel state was G.

Problem 2 can be formulated as an MDP problem with an infinite time-averaged cost which can be described by a quadruple $(\mathcal{S}, \mathcal{A}, \mathbb{P}\{\cdot|\cdot,\cdot\}, R(\cdot,\cdot))$, in which:

1) The state space $\mathcal{S}$: is the collection of all holding times and observation times, which can in turn determine the beliefs as per (27). Let a *hyperstate* be defined by $T_{i,k} \triangleq (t^h_{i,k}, t^o_{i,k})$. Then, the state at k can be described by $\boldsymbol{s}_k = (T_{1,k}, \ldots, T_{N,k})$, i.e., the collection of all hyperstates and thus the collection of all beliefs.
2) The action space $\mathcal{A}$: contains all allowable channel access decisions, i.e., $\mathcal{A} = \{\boldsymbol{a} = [a_1, \ldots, a_N] \in \{0,1\}^N : \sum_{i \in \mathcal{N}} a_i \leq 1\}$. For $M = 1$, the action at k, i.e., $\boldsymbol{a}_k$, is the first column of (18) and it inherently satisfies (4).
3) The transition Kernel $\mathbb{P}\{\cdot|\cdot,\cdot\}$: $\mathbb{P}\{\boldsymbol{s}_{k+1}|\boldsymbol{s}_k, \boldsymbol{a}\}$ is the probability of moving from state $\boldsymbol{s}_k$ to $\boldsymbol{s}_{k+1}$ if the action $\boldsymbol{a}_k$ is executed at k and it can be written as

$$\mathbb{P}\{\boldsymbol{s}_{k+1}|\boldsymbol{s}_k, \boldsymbol{a}_k\} = \prod_{i=1}^{N} \mathbb{P}\{T_{i,k+1}|T_{i,k}, \delta_{i,k}\}, \tag{28}$$

where

$$\mathbb{P}\{T_{i,k+1}|T_{i,k}, \delta_{i,k}\} = \begin{cases} b_{i,k}, & \text{if } T_{i,k+1} = (0,0) \text{ and } \delta_{i,k} = 1, \\ 1 - b_{i,k}, & \text{if } T_{i,k+1} = (t^h_{i,k}+1, 0) \text{ and } \delta_{i,k} = 1, \\ 1, & \text{if } T_{i,k+1} = (t^h_{i,k}+1, t^o_{i,k}+1) \text{ and } \delta_{i,k} = 0, \\ 0, & \text{otherwise}. \end{cases} \tag{29}$$

Despite the possibly misleading appearance of (29), one should distinguish the transition Kernel from the states. When $\delta_{i,k}=1$, the transition probability is determined by simply substituting the holding time and appearance time included in $T_{i,k}$ within (27) which yields a constant value between 0 and 1. By evaluating (29) for all i, one can obtain the transition probability Kernel from (28).
4) The cost function $R(\cdot,\cdot)$: From Proposition 1 and (16) we obtain

$$R(\boldsymbol{s}_k, \boldsymbol{a}_k) = \sum_{i=1}^{N} \operatorname{tr}\left(\Gamma_{i,\infty} P_{i,k|k}\right), \tag{30}$$

where $P_{i,k|k}$ is given in (16) which depends on $t_{i,k}$ (14) which is inferred from the holding time, i.e.,

$$t_{i,k} = \min_{j \in \mathcal{M}} t^h_{i,j,k}. \tag{31}$$

We define a policy $\pi : \mathcal{S} \to \mathcal{A}$ to be a mapping from the states to actions and denote by Π the set of all admissible policies. The goal of the MDP is to find the optimal policy which minimizes the expectation of the time-averaged cost over the infinite horizon as

$$\inf_{\pi \in \Pi} \mathbb{E}_\pi \left\{ \lim_{K \to \infty} \frac{1}{K} \sum_{k=0}^{K-1} R(\boldsymbol{s}_k, \boldsymbol{a}_k) \right\}. \tag{32}$$

This framework is applicable to the case of $M>1$ by considering the hyperstates for each wireless link. Thus, the state space is $\mathcal{S} = \mathbb{Z}^{2NM}_{\geq 0}$ and the action space and transition probabilities are also defined accordingly. In principle, after truncating $\mathcal{S}$ to a finite state space, solving (32) by dynamic programming techniques, e.g., using policy iteration or relative value iteration, is possible. However, even for the simplest case of $M = 1$, as the number of subsystems grows linearly, the number of states grows exponentially, and finding the optimal policy is shown to be PSPACE-hard [49]. Although by choosing a finite horizon in (32) the problem becomes computationally feasible for approximate methods, a central network managers with access to information of all subsystems is required to solve the problem and allocate the channels accordingly. Hereafter, we will instead consider the problem of minimizing the expected immediate cost at each time step, i.e.,

Problem 3.

$$\begin{aligned} \min_{\Delta_k} \quad & \mathbb{E}\{R(\boldsymbol{s}_k, \boldsymbol{a}_k)\}, \\ \textit{subject to} \quad & (4), (5). \end{aligned} \tag{33}$$

As it will become apparent in the next subsection, the channel access policy for solving Problem 3, i.e., Δ_k as defined in (18), can be determined in a distributed manner as required by the WNCS architecture.

This work is licensed under a Creative Commons Attribution 4.0 License. For more information, see https://creativecommons.org/licenses/by/4.0/

This article has been accepted for publication in IEEE Transactions on Automatic Control. This is the author's version which has not been fully edited and content may change prior to final publication. Citation information: DOI 10.1109/TAC.2023.3279902

B. Distributed channel access

In the beginning of each time slot k, the sensors decide whether to transmit within that slot based on their local information that is given by

$$\mathcal{I}^s_{i,k} \triangleq \mathcal{Y}_{i,k} \cup \{\delta_{i,1}, \dots, \delta_{i,k-1}, \gamma_{i,1}, \dots, \gamma_{i,k-1}\}. \tag{34}$$

Note that it is implicitly assumed that the available information at sensor i contains the past control inputs of i. The sensor does not require additional communication from the controller and can infer such information from the knowledge of the control law (10) and utilizing the ACK/NACK signal to determine the state estimate at the controller side.

The transmission decisions and their outcomes are sufficient for inferring the holding time and the observation time and therefore (34) is sufficient for evaluating the belief at k. By utilizing this information, the CoIL for minimizing the stage cost can be derived in a similar way to (20). Let $\mathcal{I}^s_k \triangleq \cup_{i\in\mathcal{N}} \mathcal{I}^s_{i,k}$. From Proposition 1 it follows that $J_k = \sum_{i=1}^N \operatorname{tr}\left(\Gamma_{i,\infty} P_{i,k|k}\right)$ which is the same as the immediate cost in (30). As a result,

$$\begin{aligned}
\mathbb{E}\{J_k|\mathcal{F}_k, \mathcal{I}^s_k\} &= \sum_{i\in\mathcal{N}} \operatorname{tr}\left(\Gamma_{i,\infty}\mathbb{E}\{P_{i,k|k}|\mathcal{F}_k, \mathcal{I}^s_{i,k}\}\right) \\
&\overset{(a)}{=} \sum_{i\in\overline{\mathcal{F}}_k} \operatorname{tr}\left(\Gamma_{i,\infty} h_i^{t_{i,k-1}+1}(\overline{P}_i)\right) \\
&\quad + \sum_{i\in\mathcal{F}_k} \operatorname{tr}\left(\Gamma_{i,\infty}\overline{P}_i\right) \mathbb{E}\left\{\gamma_{i,k} = 1|\delta_{i,k} = 1, \mathcal{I}^s_{i,k}\right\} \\
&\quad + \sum_{i\in\mathcal{F}_k} \operatorname{tr}\left(\Gamma_{i,\infty} h_i^{t_{i,k-1}+1}(\overline{P}_i)\right) \mathbb{E}\left\{\gamma_{i,k} = 0|\delta_{i,k} = 1, \mathcal{I}^s_{i,k}\right\} \\
&\overset{(b)}{=} \sum_{i\in\overline{\mathcal{F}}_k} \operatorname{tr}\left(\Gamma_{i,\infty} h_i^{t_{i,k-1}+1}(\overline{P}_i)\right) + \sum_{i\in\mathcal{F}_k} \operatorname{tr}\left(\Gamma_{i,\infty}\overline{P}_i\right) b_{i,k} \\
&\quad + \sum_{i\in\mathcal{F}_k} \operatorname{tr}\left(\Gamma_{i,\infty} h_i^{t_{i,k-1}+1}(\overline{P}_i)\right)(1 - b_{i,k}) \\
&\overset{(c)}{=} \sum_{i\in\mathcal{N}} \operatorname{tr}\left(\Gamma_{i,\infty} h_i^{t_{i,k-1}+1}(\overline{P}_i)\right) \\
&\quad - \sum_{i\in\mathcal{F}_k} \operatorname{tr}\left(\Gamma_{i,\infty}\left[h_i^{t_{i,k-1}+1}(\overline{P}_i) - \overline{P}_i\right]\right) b_{i,k},
\end{aligned} \tag{35}$$

where (a) holds since the channel states evolve independently of the dynamics and for subsystem that do not transmit at k, i.e., $i \in \overline{\mathcal{F}}_k$, $\delta_{i,k} = 0$. Since (34) is sufficient for inferring the holding time and the observation time, the sensors can compute the belief as per (27) which yields (b); finally, (c) is obtained by rearranging the terms.

As a result, the optimal channel access problem for minimizing the stage cost is equivalent to finding $\mathcal{F}_k$ such that the last summation in (35) is maximized. In accordance with the original definition, CoIL for subsystem i at k can be formulated as

$$\mathrm{CoIL}_{i,k} = \operatorname{tr}\left(\Gamma_{i,\infty}\left[h_i^{t_{i,k-1}+1}(\overline{P}_i) - \overline{P}_i\right]\right). \tag{36}$$

Since the sensors can keep track of the belief over all channels in case $M>1$, it readily follows that by reintroducing the corresponding subscript in (35), Problem 3 can be formulated as

$$\begin{aligned}
\max_{\Delta_k} \quad & \sum_{i\in\mathcal{N}}\sum_{j\in\mathcal{M}} \mathrm{CoIL}_{i,k} b_{i,j,k}\delta_{i,j,k}, \\
\text{subject to} \quad & (4), (5),
\end{aligned} \tag{37}$$

As mentioned in Subsection II-E, if local information is sufficient for determining $m_{i,j,k}$ in (21), the timer-based mechanism ensures that channel access is granted to the subsystems with the highest cost in a distributed manner while inherently satisfying constraints (4) and (5). Furthermore, each subsystem i only utilizes its local information for evaluating $\mathrm{CoIL}_{i,k}$ and $b_{i,j,k}$ as per (36) and (27), respectively. Therefore, by letting $m_{i,j,k} = \mathrm{CoIL}_{i,k} b_{i,j,k}$ we obtain

$$\tau_{i,j,k} = \frac{\lambda}{\mathrm{CoIL}_{i,k} b_{i,j,k}}. \tag{38}$$

Consequently, using these values in the timer-based mechanism determines Δ_k in a distributed fashion. Furthermore, since the evolution of CoIL and belief are independent of the control actions, the certainty equivalence principle holds and the controller given in (10) is optimal for this channel access policy.

Note that even in case of networks containing multiple subsystems with identical dynamics, this setup leads to collision-free channel access since $p_{i,j}$ and $q_{i,j}$ have Lebesgue measure zero. In other words, subsystems will *almost surely* have distinct beliefs and thus distinct timer values. Additionally, in case the network protocol requires bitwise arbitration for granting channel access, collision-free transmission can be guaranteed by implementing method such as the one proposed in [50], where contention is based on dynamic and static identifiers. In such settings, the timer value in (38) can be utilized for assigning the dynamic identifiers, while the distinct static identifier is assigned as in [50].

C. Stability analysis

We investigate the stability of the WNCSs in which timers are employed as per (38) by considering the Lyapunov mean square stability criterion. For ease of exposition, the subscript corresponding to the index of a subsystem is dropped in Definition 1 and Lemma 1.

Definition 1 (Lyapunov mean square stability [51])**.** *The equilibrium solution is said to possess stability of the second moment if given $\varepsilon > 0$, there exists $\xi(\varepsilon)$ such that $\|x_0\| < \xi$ implies*

$$\mathbb{E}\{\|x_k\|^2\} < \varepsilon. \tag{39}$$

Lemma 1. *For the architecture considered in this work, (39) is equivalent to existence of φ satisfying $0 < \varphi < \varepsilon$ such that*

$$\operatorname{tr}\left(\mathbb{E}\{P_{k|k}\}\right) < \varphi. \tag{40}$$

Proof. Let $A_L = A + BL_\infty$ and $e_{k|k} \triangleq x_k - \hat{x}_{k|k}$. The state dynamics in (1a) can be rewritten as

$$x_{k+1} = A_L\hat{x}_{k|k} + Ae_{k|k} + w_k,$$

This work is licensed under a Creative Commons Attribution 4.0 License. For more information, see https://creativecommons.org/licenses/by/4.0/

This article has been accepted for publication in IEEE Transactions on Automatic Control. This is the author's version which has not been fully edited and content may change prior to final publication. Citation information: DOI 10.1109/TAC.2023.3279902

from which we obtain

$$\mathbb{E}\{\|x_{k+1}\|^2|\mathcal{I}_k\} = \mathrm{tr}\left(A_L^{\mathrm{T}}A_L\mathbb{E}\{\hat{x}_{k|k}\hat{x}_{k|k}^{\mathrm{T}}|\mathcal{I}_k\}\right) + \mathrm{tr}\left(A^{\mathrm{T}}A\mathbb{E}\{e_{k|k}e_{k|k}^{\mathrm{T}}|\mathcal{I}_k\}\right) + \mathrm{tr}(W), \tag{41}$$

due to the fact that w_k is zero-mean and independent of the state and its estimate. Furthermore, $\mathbb{E}\{e_{k|k}^{\mathrm{T}}\hat{x}_{k|k}|\mathcal{I}_k\} = \mathbb{E}\{x_k^{\mathrm{T}}|\mathcal{I}_k\}\hat{x}_{k|k} - \hat{x}_{k|k}^{\mathrm{T}}\hat{x}_{k|k} = 0$. From the definition of the error covariance matrix at the estimator and the law of total expectation it follows that

$$\mathbb{E}\{\|x_{k+1}\|^2\} = \mathrm{tr}\left(A_L^{\mathrm{T}}A_L\mathbb{E}\{\hat{x}_{k|k}\hat{x}_{k|k}^{\mathrm{T}}\}\right) + \mathrm{tr}\left(A^{\mathrm{T}}A\mathbb{E}\{P_{k|k}\}\right) + \mathrm{tr}(W), \tag{42}$$

whose boundedness guarantees stability as per Definition 1. Due to the following property [52, Fact 8.12.28]

$$\mathrm{tr}\left(A^{\mathrm{T}}A\mathbb{E}\{P_{k|k}\}\right) \leq \sigma_{\max}(A^{\mathrm{T}}A)\,\mathrm{tr}\left(\mathbb{E}\{P_{k|k}\}\right), \tag{43}$$

we conclude that boundedness of $\mathbb{E}\{P_{k|k}\}$ ensures that the second term in (42) is bounded. Additionally, thanks to the perfect communication link between the controller and actuators, boundedness of $\mathbb{E}\{P_{k|k}\}$ guarantees that the feedback gain L_∞ is stabilizing [4]. Since the certainty equivalence principle holds, the adopted controller ensures boundedness of the state estimate in steady-state. Hence, the first term in (42) is bounded. Thus, existence of $0<\varphi<\infty$ such that $\mathrm{tr}\left(\mathbb{E}\{P_{k|k}\}\right)<\varphi$, ensures that (42) is bounded by some $\varepsilon<\infty$, which is greater than φ due to non-negativeness of all terms in (42), thus completing the proof. □

As a result of Lemma 1, the entire system is stable in the sense of Definition 1 if and only if there exists $0 < \varphi_i < \infty$ such that $\mathrm{tr}\left(\mathbb{E}\{P_{i,k|k}\}\right) < \varphi_i$ for all $i \in \mathcal{N}$. Note that the time elapsed since the last successful packet reception at the estimator, i.e., $t_{i,k}$, is sufficient for computation of the error covariance as

$$P_{i,k|k} = h^{t_{i,k}}(\overline{P}_i) = \sum_{c=0}^{t_{i,k}} A_i^c\overline{P}_iA_i^{\mathrm{T}c} + \sum_{c=1}^{t_{i,k}} A_i^cW_iA_i^{\mathrm{T}c}, \tag{44}$$

where $\sum_{c=1}^{0} \triangleq 0$. In the following, we take advantage of the ergodicity of the process $t_{i,k}$ to derive stability conditions. The following illustrative example demonstrates how the Markov chain modeling $t_{i,k}$ can be constructed and analyzed for two unstable subsystems sharing a single channel.

Example 1. *Consider a WNCS that consists of two unstable subsystems and a single channel, i.e., N=2 and M=1, and the channel access is granted by utilizing the timer setup in (38). Although the channel access decisions are time-varying, the evolution of the system can be described by a Markov chain such that these deterministic decisions are only dependent on the state of the chain. Let $\mathcal{S}=\mathbb{Z}_{\geq 0}^4$ denote the state space of a four-dimensional Markov chain, where each state $\{(l,l'),(m,m')\}\in\mathcal{S}$ corresponds to $t_{1,k}^h=l$, $t_{1,k}^o=l'$, $t_{2,k}^h=m$, and $t_{2,k}^o=m'$. Therefore, according to their respective definitions in (25) and (26), the state space can be reduced to all $\{(l,l'),(m,m')\} \in \mathbb{Z}_{\geq 0}^4$ such that $l' \leq l$ and $m' \leq m$. Since knowledge of the holding time and observation time is sufficient for determining CoIL (36) and belief (27), the timer values and the resulting channel access decisions are state-dependent. We denote the decisions by*

$$\eta = \begin{cases} 0, & \text{if Subsystem 1 claims the channel,} \\ 1, & \text{if Subsystem 2 claims the channel,} \end{cases} \tag{45}$$

where η=0 and η=1 correspond to Δ=[1 0]^T and Δ=[0 1]^T, respectively. As a result, the (possibly) non-zero transition probabilities are

$$\mathbb{P}\left\{\{(0,0),(m+1,m'+1)\} \mid \{(l,l'),(m,m')\},\eta\right\} \triangleq \xi_1 = (1-\eta)b_1, \tag{46a}$$

$$\mathbb{P}\left\{\{(l+1,0),(m+1,m'+1)\} \mid \{(l,l'),(m,m')\},\eta\right\} \triangleq \xi_2 = (1-\eta)(1-b_1), \tag{46b}$$

$$\mathbb{P}\left\{\{(l+1,l'+1),(0,0)\} \mid \{(l,l'),(m,m')\},\eta\right\} \triangleq \xi_3 = \eta b_2, \tag{46c}$$

$$\mathbb{P}\left\{\{(l+1,l'+1),(m+1,0)\} \mid \{(l,l'),(m,m')\},\eta\right\} \triangleq \xi_4 = \eta(1-b_2), \tag{46d}$$

where b_i is the belief of subsystem i (27) which is also state-dependent despite not being included in the notation for the ease of exposition.

In order to describe the transition probability matrix in a compact form, we use the following convention.

$$\{\boldsymbol{l},m,m'\} \triangleq \{(l,0),(m,m')\},\{(l,1),(m,m')\},\ldots,\{(l,l),(m,m')\}, \tag{47a}$$

$$\{\boldsymbol{l},\boldsymbol{m}\} \triangleq \{\boldsymbol{l},m,0\},\{\boldsymbol{l},m,1\},\ldots,\{\boldsymbol{l},m,m\}. \tag{47b}$$

Let $P_{\boldsymbol{l},\boldsymbol{m}}^{11} \triangleq \mathbb{P}\{\{\boldsymbol{l}+\boldsymbol{1},\boldsymbol{m}+\boldsymbol{1}\}|\{\boldsymbol{l},\boldsymbol{m}\},\eta\}$ be a transition probability submatrix given by

$$P_{\boldsymbol{l},\boldsymbol{m}}^{11} = \begin{bmatrix} \Xi_4 & \Xi_2 & \mathbf{0} & \mathbf{0} & \ldots & \mathbf{0} \\ \Xi_4 & \mathbf{0} & \Xi_2 & \mathbf{0} & \ldots & \mathbf{0} \\ \vdots & \vdots & \vdots & \vdots & \ldots & \vdots \\ \Xi_4 & \mathbf{0} & \mathbf{0} & \mathbf{0} & \ldots & \Xi_2 \end{bmatrix},$$

where $\Xi_4 = \begin{bmatrix}\mathbf{0}_{l+1\times 1} & \xi_4\mathrm{I}_{l+1}\end{bmatrix}$ and $\Xi_2 = \begin{bmatrix}\xi_2\mathbf{1}_{l+1\times 1} & \mathbf{0}_{l+1\times l+1}\end{bmatrix}$. Similarly, define submatrices $P_{\boldsymbol{l},\boldsymbol{m}}^{10} \triangleq \mathbb{P}\{\{\boldsymbol{l}+\boldsymbol{1},\boldsymbol{0}\}|\{\boldsymbol{l},\boldsymbol{m}\},\eta\}$ and $P_{\boldsymbol{l},\boldsymbol{m}}^{01} \triangleq \mathbb{P}\{\{\boldsymbol{0},\boldsymbol{m}+\boldsymbol{1}\}|\{\boldsymbol{l},\boldsymbol{m}\},\eta\}$ which are given by

$$P_{\boldsymbol{l},\boldsymbol{m}}^{10} = \begin{bmatrix} \Xi_3 \\ \Xi_3 \\ \vdots \\ \Xi_3 \end{bmatrix}, \quad P_{\boldsymbol{l},\boldsymbol{m}}^{01} = \begin{bmatrix} \mathbf{0} & \Xi_1 & \mathbf{0} & \mathbf{0} & \ldots & \mathbf{0} \\ \mathbf{0} & \mathbf{0} & \Xi_1 & \mathbf{0} & \ldots & \mathbf{0} \\ \vdots & \vdots & \vdots & \vdots & \ddots & \vdots \\ \mathbf{0} & \mathbf{0} & \mathbf{0} & \mathbf{0} & \ldots & \Xi_1 \end{bmatrix},$$

where $\Xi_3 = \begin{bmatrix}\mathbf{0}_{l+1\times 1} & \xi_3\mathrm{I}_{l+1}\end{bmatrix}$ and $\Xi_1 = \xi_1\mathbf{1}_{l+1\times 1}$. As a result, the transition probability matrix of the chain, denoted by P, can be formed as shown in (48).

Note that the state $\{\mathbf{0},\mathbf{0}\}$ is transient and it only exists when initiating and thus we exclude it from the chain. Furthermore, the unreachable states are removed from the chain and the transition probability matrix is modified accordingly, in order to ensure that the resulting chain has a unique stationary distribution. More specifically, the communication constraints imply that both subsystems cannot transmit simultaneously.

This work is licensed under a Creative Commons Attribution 4.0 License. For more information, see https://creativecommons.org/licenses/by/4.0/

This article has been accepted for publication in IEEE Transactions on Automatic Control. This is the author's version which has not been fully edited and content may change prior to final publication. Citation information: DOI 10.1109/TAC.2023.3279902

Consequently, $\{(l,l'),(m,m')\} \in \mathcal{S}$ which satisfy $l = m$, $l = m'$, $l' = m$, or $l' = m'$ are unreachable. By excluding such states from the state space, the resulting chain has a single communicating class and it is irreducible, aperiodic and positive recurrent. Hence, it has a unique stationary distribution denoted by $\boldsymbol{\pi}$ which is found by solving

$$\boldsymbol{\pi} P = \boldsymbol{\pi} \qquad \boldsymbol{\pi}\mathbf{1} = 1, \tag{49}$$

where $\mathbf{1}$ is the all-ones column vector of appropriate dimensions [53, Ch. 1]. With respect to the introduced notation in (47a) we can write $\boldsymbol{\pi} = [\boldsymbol{\pi}_{\{\mathbf{0},\mathbf{1}\}}, \boldsymbol{\pi}_{\{\mathbf{0},\mathbf{2}\}}, \ldots]$, where the dimensions of $\boldsymbol{\pi}$ complies with the transition probability matrix P, and the invariant probability of holding times at each subsystem is found by solving (49). Since $M = 1$, $t_{i,k} = t^h_{i,k}$ and we define

$$\mu_1(t) \triangleq \mathbb{P}\{t_{1,k} = t\} = \sum_{\boldsymbol{m}=0}^{\infty} \boldsymbol{\pi}_{\{\boldsymbol{t},\boldsymbol{m}\}}, \tag{50}$$

$$\mu_2(t) \triangleq \mathbb{P}\{t_{2,k} = t\} = \sum_{\boldsymbol{l}=0}^{\infty} \boldsymbol{\pi}_{\{\boldsymbol{l},\boldsymbol{t}\}}, \tag{51}$$

which are essential for the stability analysis.

Remark 1. *Regarding the properties of the discussed Markov chain, note that CoIL of unstable subsystems grows exponentially with respect to time elapsed since the last successful transmission. Since all subsystems in this work are assumed to be unstable, regardless of their specific characteristics and the parameters of the communication channels, a subsystem i with a large enough holding time will attempt to transmit until its packet goes through meaning that eventually $T_{i,k} = (0,0)$. As a consequence, all states are accessible from each other (communicating), which ensures that the chain is irreducible. The chain is indeed aperiodic due to the possibility of packet dropouts which means that all the nonzero transition probabilities are less than 1. Moreover, from the preceding discussion it follows that the waiting time for the chain to return to a state is almost surely finite meaning that the chain is positive recurrent. Hence, the chain has a unique stationary distribution.*

The method described in Example 1 can readily be applied to larger WNCSs. In such settings, the state space is given by $\mathcal{S} = \mathbb{Z}^{2NM}_{\geq 0}$ and each recurrent state can possibly transition to $N!/(N-M)!$ other states. Despite the larger state space, in principle, the transition probability matrix can be formed similarly. By removing the transient states as discussed, the resulting chain will have a unique limiting distribution and thus $\mu_i(t)$ can be determined for all $i \in \mathcal{N}$ and $t \geq 0$ accordingly. The following result demonstrates how the boundedness of $\operatorname{tr}\left(\mathbb{E}\{P_{k|k}\}\right)$ in Lemma 1 and $\mu_i(t)$ are connected.

Theorem 1. *The proposed channel access method stabilizes the WNCS in the sense of Definition 1 if the following condition holds for all $i \in \mathcal{N}$.*

$$\lim_{t\to\infty} \mu_i(t)^{1/t} < \frac{1}{\sigma^2_{\max}(A_i)} \tag{52}$$

Proof. The chain is irreducible, aperiodic and positive recurrent. Thus, the ergodic theorem allows to write the limit of the expected value of (44) as

$$\begin{aligned}\lim_{k\to\infty} \mathbb{E}\{P_{i,k|k}\} = &\sum_{t=0}^{\infty} \mu_i(t) \sum_{c=0}^{t} (A_i^c \overline{P}_i A_i^{\mathrm{T}c}) \\ &+ \sum_{t=0}^{\infty} \mu_i(t) \sum_{c=1}^{t} (A_i^c W_i A_i^{\mathrm{T}c}).\end{aligned} \tag{53}$$

Subsequently,

$$\left\| \lim_{k\to\infty} \mathbb{E}\{P_{i,k|k}\} \right\| \leq \left(\|\overline{P}_i\| + \|W_i\|\right) \sum_{t=0}^{\infty} \mu_i(t) \sum_{c=0}^{t} \|A_i^c\|^2 . \tag{54}$$

Similar to the proof in [40, Theorem 1], by Cauchy's root test, this series is convergent if

$$\lim_{t\to\infty} \mu_i(t)^{1/t} \left\|A_i^t\right\|^{2/t} < 1, \tag{55}$$

and from Gelfand's formula we obtain

$$\sigma^2_{\max}(A_i) \lim_{t\to\infty} \mu_i(t)^{1/t} < 1. \tag{56}$$

Hence, if (52) holds for all $i \in \mathcal{N}$, $\lim_{k\to\infty} \mathbb{E}\{P_{i,k|k}\}$ in (54) is bounded. Thus, $0 < \varphi_i < \infty$ exists such that $\operatorname{tr}\left(\mathbb{E}\{P_{i,k|k}\}\right) < \varphi_i$ and the assertion follows. □

As in Example 1, finding an analytical expression for $\mu_i(t)$ to evaluate (52) is not always possible. Despite this, Theorem 1 can be utilized for examining stability in practice by utilizing the *p-series convergence* test as it will be shown in Section V-A.

$$P = \begin{array}{c} \\ \{\mathbf{0},\mathbf{1}\} \rightarrow \\ \{\mathbf{0},\mathbf{2}\} \rightarrow \\ \vdots \\ \{\mathbf{1},\mathbf{0}\} \rightarrow \\ \cancel{\{\mathbf{1},\mathbf{1}\}} \rightarrow \\ \vdots \end{array} \begin{array}{c} \begin{array}{ccccccccccccc} \{\mathbf{0},\mathbf{1}\} & \{\mathbf{0},\mathbf{2}\} & \{\mathbf{0},\mathbf{3}\} & \ldots & \{\mathbf{1},\mathbf{0}\} & \cancel{\{\mathbf{1},\mathbf{1}\}} & \{\mathbf{1},\mathbf{2}\} & \{\mathbf{1},\mathbf{3}\} & \ldots & \{\mathbf{2},\mathbf{0}\} & \{\mathbf{2},\mathbf{1}\} & \cancel{\{\mathbf{2},\mathbf{2}\}} & \ldots \\ \downarrow & \downarrow & \downarrow & & \downarrow & \downarrow & \downarrow & \downarrow & & \downarrow & \downarrow & \downarrow & \end{array} \\ \begin{bmatrix} \mathbf{0} & P^{01}_{\mathbf{0},\mathbf{1}} & \mathbf{0} & \ldots & P^{10}_{\mathbf{0},\mathbf{1}} & \mathbf{0} & P^{11}_{\mathbf{0},\mathbf{1}} & \mathbf{0} & \ldots & \mathbf{0} & \mathbf{0} & \mathbf{0} & \ldots \\ \mathbf{0} & \mathbf{0} & P^{01}_{\mathbf{0},\mathbf{2}} & \ldots & P^{10}_{\mathbf{0},\mathbf{2}} & \mathbf{0} & \mathbf{0} & P^{11}_{\mathbf{0},\mathbf{2}} & \ldots & \mathbf{0} & \mathbf{0} & \mathbf{0} & \ldots \\ \vdots & \vdots & \vdots & \vdots & \vdots & \vdots & \vdots & \vdots & \vdots & \vdots & \vdots & \vdots & \vdots \\ P^{01}_{\mathbf{1},\mathbf{0}} & \mathbf{0} & \mathbf{0} & \ldots & \mathbf{0} & \mathbf{0} & \mathbf{0} & \mathbf{0} & \ldots & P^{10}_{\mathbf{1},\mathbf{0}} & P^{11}_{\mathbf{1},\mathbf{0}} & \mathbf{0} & \ldots \\ \cancel{\mathbf{0}} & \cancel{P^{01}_{\mathbf{1},\mathbf{1}}} & \cancel{\mathbf{0}} & \cancel{\ldots} & \cancel{\mathbf{0}} & \cancel{\mathbf{0}} & \cancel{\mathbf{0}} & \cancel{\mathbf{0}} & \cancel{\ldots} & \cancel{P^{10}_{\mathbf{1},\mathbf{1}}} & \cancel{\mathbf{0}} & \cancel{P^{11}_{\mathbf{1},\mathbf{1}}} & \cancel{\ldots} \\ \vdots & \vdots & \vdots & \vdots & \vdots & \vdots & \vdots & \vdots & \vdots & \vdots & \vdots & \vdots & \vdots \end{bmatrix} \end{array} \tag{48}$$

This work is licensed under a Creative Commons Attribution 4.0 License. For more information, see https://creativecommons.org/licenses/by/4.0/

This article has been accepted for publication in IEEE Transactions on Automatic Control. This is the author's version which has not been fully edited and content may change prior to final publication. Citation information: DOI 10.1109/TAC.2023.3279902

IV. Channel access over an unknown Gilbert-Elliott channel

Implementing the timer-based mechanism according to (38) assumes complete knowledge of the transition probabilities of the GE model. However, this is a strong assumption and such information is not known *a priori* in practice. This assumption can be relaxed by adopting a Bayesian learning method which maintains a probability distribution over the possible settings of each unknown parameter. We first address how the new channel state observation can be incorporated for updating the prior distribution over the unknown parameters. Then, we propose a heuristic posterior sampling algorithm for computational tractability in practice and exploit the learning outcome for providing channel access with TBCoIL.

A. Bayesian framework

In Bayesian approach, an initial prior distribution is assumed over the unknown parameters, and the posterior distribution is updated using the Bayes' rule. The unknown channel parameters are within the interval $[0,1]$ and they can be viewed as random variables consisting of the number of successes in Bernoulli trials with unknown probability of success p and q. Here, we drop the subscripts for distinguishing each wireless link for ease of exposition. Beta distribution is the conjugate prior for Bernoulli distribution. Therefore, we assume that the prior distribution of the unknown transition probabilities of the GE model, i.e., p and q, follow the Beta distribution. Furthermore, they are independent which yields

$$\mathbb{P}\{p,q;\Phi\} = \mathbb{P}\{p;\phi_1,\phi_2\}\mathbb{P}\{q;\phi_3,\phi_4\}, \tag{57}$$

where

$$\mathbb{P}(p;\,\phi_1,\phi_2) = \frac{p^{\phi_1-1}(1-p)^{\phi_2-1}}{B(\phi_1,\phi_2)}, \tag{58}$$

$$\mathbb{P}(q;\,\phi_3,\phi_4) = \frac{q^{\phi_3-1}(1-q)^{\phi_4-1}}{B(\phi_3,\phi_4)}, \tag{59}$$

and $B(\cdot)$ denotes the Beta function. These prior distributions are parameterized by $\Phi = [\phi_1\ \phi_2\ \phi_3\ \phi_4] \in \mathbb{Z}^4_{\geq 0}$ which we will refer to as *posterior count*. This choice of prior distribution highly facilitates the posterior update. More specifically, after new observations are made, the posterior update can easily be done by updating the posterior counts (ϕ_1,ϕ_2) for p and (ϕ_3,ϕ_4) for q.

Example 2. *Consider that the channel state is G and* $\Phi = [1,\ 2,\ 2,\ 3]$. *Then, we observe that the channel stays G (G to G transition with probability* $1-p$*) for the first three time steps and then transitions to B (G to B with probability* p*). The updated posterior count is then simply calculated as* $\Phi = [1+1,\ 2+3,\ 2,\ 3]$.

Let $o_k \in \{G,B,Z\}$ denote the observation at k, where $o_k = Z$ represents no transmission attempt k. More specifically, if the sensor transmits at k, the actual channel state $c_k \in \{G,B\}$ is observed and $o_k = c_k$. Otherwise, $o_k = Z$ which corresponds to not observing the actual channel state. We denote the channel state history and observation history up to k by c^k and o^k, respectively. Then, the joint probability distribution of the channel state at k and the transition probabilities p and q given the observation history o^{k-1} is given by

$$\begin{aligned}\mathbb{P}\{c_k,p,q|o^{k-1}\} &= \mathbb{P}\{c_k,o^{k-1}|p,q\}\mathbb{P}\{p,q\}/\mathbb{P}\{o^{k-1}\} \\ &= \sum_{c^{k-1}} \mathbb{P}\{c^k,o^{k-1}|p,q\}\mathbb{P}\{p,q\}/\mathbb{P}\{o^{k-1}\}.\end{aligned} \tag{60}$$

Multiple state histories can lead to the same posterior count. Consider the scenario in which there are a, b, c, and d number of G to B, G to G, B to G, and B to B state transitions, respectively. Regardless of the order in which the state transitions occur, we have

$$\mathbb{P}\{c^k|p,q\}\mathbb{P}\{p,q\} = \mathbb{P}\{c^k|p,q\} = p^a(1-p)^b q^c(1-q)^d, \tag{61}$$

where we used the fact that $\mathbb{P}\{p,q\}=1$. Let $C(o^{k-1})$ denote all possible state histories based on the observation history o^{k-1} which is given by

$$C(o^{k-1}) = \{c^{k-1} : c_\kappa = o_\kappa, \forall \kappa \in \{k' : o_{k'} \neq Z\}\}. \tag{62}$$

Let the total number of state histories that lead to the same posterior count Φ be denoted by $\Psi(\Phi, C(o^{k-1}), c_k)$, which we will refer to as the *appearance count*. The posterior distribution can be fully described by the appearance count associated with each posterior count and channel state, up to the normalization term $\mathbb{P}\{o^{k-1}\}$. More specifically, by moving the normalization term to the left side of the equation, we can rewrite (60) as

$$\begin{aligned}\mathbb{P}\{c_k,p,q|o^{k-1}\}\mathbb{P}\{o^{k-1}\} &= \sum_{s^{k-1}\in C(o^{k-1})} \mathbb{P}\{c^k|p,q\} \\ &= \sum_{\Phi} \Psi(\Phi, C(o^{k-1}), c_k) p^{\phi_1-1}(1-p)^{\phi_2-1} q^{\phi_3-1}(1-q)^{\phi_4-1}.\end{aligned} \tag{63}$$

When a new observation is obtained at k, the posterior at time $k+1$ is updated recursively as follows

$$\begin{aligned}\mathbb{P}\{c_{k+1},p,q|o^k\} &= \sum_{c_k} \mathbb{P}\{c_{k+1},p,q,c_k|o^{k-1},o_k\} \\ &= \sum_{c_k} \mathbb{P}\{c_{k+1},p,q,c_k,o_k|o^{k-1}\}/\mathbb{P}\{o_k|o^{k-1}\} \\ &= \sum_{c_k} \mathbb{P}\{c_k,p,q|o^{k-1}\}\mathbb{P}\{c_{k+1},o_k|c_k,p,q,o^{k-1}\}/\mathbb{P}\{o_k|o^{k-1}\} \\ &= \sum_{c_k} \mathbb{P}\{c_k,p,q|o^{k-1}\}\mathbb{P}\{o^{k-1}|c_{k+1},o_k,c_k,p,q\} \\ &\qquad \cdot \mathbb{P}\{c_{k+1},o_k|c_k,p,q\}/(\mathbb{P}\{o^{k-1}|c_k,p,q\}\mathbb{P}\{o_k|o^{k-1}\}) \\ &= \sum_{c_k} \mathbb{P}\{c_k,p,q|o^{k-1}\}\mathbb{P}\{c_{k+1},o_k|c_k,p,q\}/\mathbb{P}\{o_k|o^{k-1}\}.\end{aligned} \tag{64}$$

As a result of (64), the update has a simple form for each posterior count. Furthermore, the number of posterior counts remain unchanged whenever the channel state is observed, i.e., $o_k \in \{G,B\}$. Otherwise, this number grows by a factor of less than or equal to two.

This work is licensed under a Creative Commons Attribution 4.0 License. For more information, see https://creativecommons.org/licenses/by/4.0/

This article has been accepted for publication in IEEE Transactions on Automatic Control. This is the author's version which has not been fully edited and content may change prior to final publication. Citation information: DOI 10.1109/TAC.2023.3279902

Example 3. *Assume that $o_k = G$ which implies that $c_k = G$. The posterior for $c_{k+1} = G$ is given by*

$$\begin{aligned}\mathbb{P}\{G,p,q|o^k\} &= \mathbb{P}\{G,p,q|o^{k-1}\}\mathbb{P}\{G|c_k,p,q\}/\mathbb{P}\{o_k|o^{k-1}\}\\ &= \sum_{\Phi}\Psi(\Phi, C(o^{k-1}), G)p^{\phi_1-1}(1-p)^{\phi_2-1}q^{\phi_3-1}\\ &\qquad .(1-q)^{\phi_4-1}.(1-p)/\mathbb{P}\{o^k\}\\ &= \sum_{\Phi'}\Psi(\Phi', C(o^{k-1}), G)p^{\phi_1'-1}(1-p)^{\phi_2'-1}q^{\phi_3'-1}\\ &\qquad .(1-q)^{\phi_4'-1}/\mathbb{P}\{o^k\},\end{aligned} \tag{65}$$

where $\Phi' = [\phi_1 \ \phi_2+1 \ \phi_3 \ \phi_4]$ and can it can readily be used as the prior for the next time step. If $o_k = Z$, the same posterior update is given by iterating over both possibilities for the channel state at k, i.e.,

$$\begin{aligned}&\mathbb{P}\{G,p,q|o^k\}\\ &= \sum_{c_k\in\{G,B\}}\mathbb{P}\{c_k,p,q|o^{k-1}\}\mathbb{P}\{G|c_k,p,q\}/\mathbb{P}\{o_k|o^{k-1}\},\end{aligned} \tag{66}$$

which can increase the number of posterior counts. Fig. 4 illustrates how the posterior counts and their respective appearance counts are updated with respect to the obtained observation.

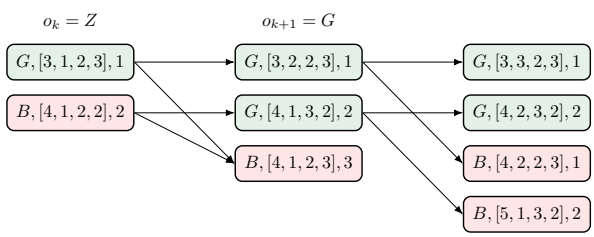

Fig. 4. Graphical representation of the update procedure when the channel state is not observed at k and it is G at $k+1$. The contents of each rectangle are the channel state, posterior count, and appearance count, respectively. Note that since $o_k = Z$, the number of possible posterior counts increases.

B. Online learning through the timer-based mechanism

The aforementioned method allows for incorporating the uncertainty in the transition probabilities in the decision making process. Due to the lack of *a priori* knowledge of the underlying channel parameters, the belief for implementing the setup in (38) cannot be directly evaluated as per (27). Nonetheless, in principle, the belief can be inferred from the joint distribution of the channel state and its parameters in the aforementioned framework. In practice, however, this method is computationally infeasible since whenever the sensor does not transmit over a link, the number of posteriors for that link grows and inevitably goes to infinity over time.

To circumvent the curse of dimensionality, we propose a heuristic method by combining the idea of approximate belief monitoring [54] and the posterior sampling algorithm proposed in [55]. In essence, after each update, only K posterior counts are kept, which are drawn randomly with respect to the respective appearance counts. Algorithm 1 presents how at any time k, sensor i evaluates its belief for channel j which is denoted by $b^L_{i,j,k}$. This belief is incorporated in TBCoIL for providing channel access as

$$\tau_{i,j,k} = \frac{\lambda}{\mathrm{CoIL}_{i,k}b^L_{i,j,k}}. \tag{67}$$

We define $\zeta^G \triangleq \{\Phi, \Psi, P\}$ as the posterior count Φ with appearance count Ψ for being in state G which has the probability P. In case of successful transmission at $k-1$, the posterior for computation of belief at k is obtained by considering the possible state transition from ζ^G, which could be to G, denoted by ζ^{G2G}, or to B, denoted by ζ^{G2B}. The transition probabilities depend on p which is the mean of the beta distribution associated with the posterior count, i.e., $p = \phi_1/(\phi_1+\phi_2)$. Similarly, $\zeta^B \triangleq \{\Phi, \Psi, P\}$ denotes the parameters corresponding to B state which can transition to G or B, i.e., ζ^{B2G} and ζ^{B2B}, respectively, with $q = \phi_3/(\phi_3+\phi_4)$. The updated posteriors are formed in Line 9, where $\cup$ denotes merging the identical posterior counts by summing the respective appearance count and P. Then, K number of posterior counts are chosen randomly such that the probability of a posterior count being selected is proportional to the associated appearance count. Finally, P's are normalized for the remaining posterior counts and the learned belief is determined by summing the probability of all the posteriors of being in G, as in Line 13.

Remark 2. *Typically, the initial probability distribution over the unknown parameters is assumed to be uniform and thus $\Phi = [1,1,1,1]$ when initiating. To ensure that implementing (67) guarantees collision-free channel access even in homogeneous WNCSs, the initial posterior count can be set to $\Phi = [1+\epsilon_1, 1+\epsilon_2, 1+\epsilon_3, 1+\epsilon_4]$ where $\epsilon_1,\epsilon_2,\epsilon_3,\epsilon_4 \sim \mathcal{U}(-\alpha,\alpha)$ is chosen randomly by subsystems for each link. This ensures that $b^L_{i,j,k}$ is Lebesgue measure zero and by choosing $\alpha \ll 1$ the impact of the biased priors becomes negligible.*

Remark 3. *When the idea of approximate belief monitoring is applied for a single agent interacting with an unknown environment, accurate convergence is guaranteed since all uncertainty is represented explicitly [41], [56]. Proving the convergence of Algorithm 1 is however a challenging open problem. In addition to the unknown channel parameters, the decisions and thus observations are determined by the outcome of implementing the timer-based mechanism which is highly influenced by the time-varying CoIL. Although more unstable subsystems observe the channel states more frequently, all subsystems eventually make sufficient observations due to the exponential growth of CoIL. Therefore, convergence can be conjectured which is confirmed by the simulations in Section V.*

V. Numerical Results

In this section, we first present a method for examining the stability of the system in Example 1. Next, the effect of channel access decisions on the performance of the learning algorithm is demonstrated. Finally, we examine the performance of the proposed timer-setups for known and unknown GE channel parameters. The following results are obtained for $Q = I_2$ and $R = 0.01I_2$ as the weighting matrices in (9) and $B = C = I_2$ in (1).

This work is licensed under a Creative Commons Attribution 4.0 License. For more information, see https://creativecommons.org/licenses/by/4.0/

This article has been accepted for publication in IEEE Transactions on Automatic Control. This is the author's version which has not been fully edited and content may change prior to final publication. Citation information: DOI 10.1109/TAC.2023.3279902

Algorithm 1: Posterior sampling of sensor i for channel j at k

Input: Decision variables at the last step, $\delta_{i,j,k-1}$ and $\gamma_{i,j,k-1}$, and posterior sampling parameter K
Output: Learned belief $b^L_{i,j,k}$

```
if δ_{i,j,k-1} = 1 and γ_{i,j,k-1} = 1 then
    G Update()
else if δ_{i,j,k-1} = 1 and γ_{i,j,k-1} = 0 then
    B Update()
else
    G Update()
    B Update()
end
ζ^G ← ζ^{G2G} ∪ ζ^{B2G} and ζ^B ← ζ^{G2B} ∪ ζ^{B2B}
ζ^G ← K number of posterior counts in ζ^G randomly drawn w.r.t. their respective Ψ
ζ^B ← K number of posterior counts in ζ^B randomly drawn w.r.t. their respective Ψ
normalize ζ^G(P) and ζ^B(P)
b^L_{i,j,k} ← Σ ζ^G(P)
Procedure G Update()
    ζ^{G2G} ← ζ^G and ζ^{G2B} ← ζ^G
    Update posterior counts ζ^{G2G}(φ_2) ← ζ^G(φ_2) + 1 and ζ^{G2B}(φ_1) ← ζ^G(φ_1) + 1
    Update probabilities ζ^{G2G}(P) ← (1 − p)ζ^G(P) and ζ^{G2B}(P) ← pζ^G(P)
Procedure B Update()
    ζ^{B2G} ← ζ^B and ζ^{B2B} ← ζ^B
    Update posterior counts ζ^{B2G}(φ_3) ← ζ^B(φ_3) + 1 and ζ^{B2B}(φ_4) ← ζ^B(φ_4) + 1
    Update probabilities ζ^{B2G}(P) ← qζ^B(P) and ζ^{B2B}(P) ← (1 − q)ζ^B(P)
```

A. Stability evaluation

This subsection presents a numerical approach for examining the stability of two identical subsystems sharing a channel presented in Example 1. Although the discussed Markov chain has countably-infinite state space, we first assume that the maximal interval between two successful transmissions is finite. This will enable us to determine the stationary distribution analytically and conjecture the convergence of the infinite series in (54), and consequently, whether the condition in (52) holds. To this end, we consider the truncated chain with a finite state space with $0 \leq l \leq \bar{l}$ and $0 \leq m \leq \bar{m}$. This corresponds to assuming a maximal interval of $\bar{l}$ for successful transmission of Subsystem 1 and $\bar{m}$ for Subsystem 2. Let $\hat{P}$ denote the transition probability matrix of the new chain, which is obtained by truncating P in (48). Since $\hat{P}$ is row stochastic, irreducible, and aperiodic, the stationary distribution can be obtained by [57]

$$\boldsymbol{\pi} = \mathbf{1}^{\mathrm{T}}(\hat{P} - I + D)^{-1}, \tag{68}$$

where I, D, and $\mathbf{1}$ are the identity matrix, all-one-matrix, and the all-one column vector of appropriate dimensions. To examine whether the series on the right hand side of (54) is convergent, we utilize the p-series convergence test. Hence, if $p > 1$ and $\beta < \infty$ exist such that

$$\lim_{T\to\infty} \sum_{t=0}^{T} \mu_i(t) \left\|A_i\right\|^{2t} \leq \lim_{T\to\infty} \sum_{t=0}^{T} \frac{\beta}{t^p}, \tag{69}$$

then (55) holds, which guarantees stability. By using the numerical values obtained from (68) for a finite horizon, one can examine the behavior of (69) and conjecture whether the condition in Theorem 1 holds.

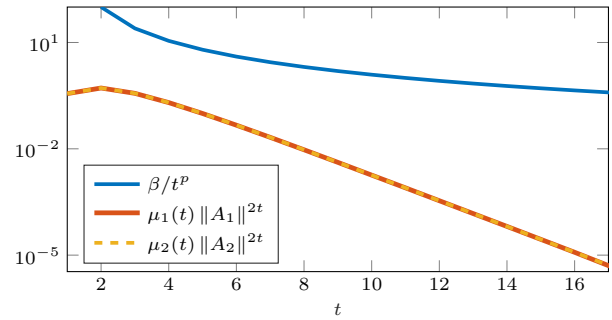

Fig. 5. Convergence analysis of the left hand side (69) by element-wise comparison with the p-series ($\beta = 100$, $p = 2$) given failure rates $p_1 = 0.25$ and $p_2 = 0.35$, and recovery rates $q_1 = 0.80$ and $q_2 = 0.70$ for Subsystem 1 and Subsystem 2, respectively.

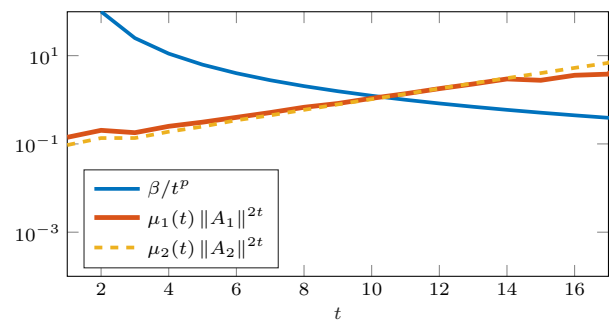

Fig. 6. Convergence analysis of the left hand side (69) by element-wise comparison with the p-series ($\beta = 100$, $p = 2$) given that $p_1 = 0.25$, $q_1 = 0.20$, $p_2 = 0.35$, $q_2 = 0.10$.

Fig. 5 illustrates the values of $\mu_i(t)\left\|A_i\right\|^{2t}$ and β/t^p as a function of t given that $p = 2$ and $\beta = 100$ with the system matrix $A_i = 1.2I_2$. Furthermore, the GE transition probabilities for Subsystem 1 and Subsystem 2 are assumed to be $p_1 = 0.25$, $q_1 = 0.80$, and $p_2 = 0.35$, $q_2 = 0.70$, respectively. As the results indicate, $\mu_i(t)\left\|A_i\right\|^{2t}$ monotonically decreases as t increases for $t \geq 2$ for both subsystems. Therefore, since the convergent series $\lim_{T\to\infty} \sum_{t=0}^{T} \frac{\beta}{t^p}$ upper-bounds $\lim_{T\to\infty} \sum_{t=0}^{T} \mu_i(t)\left\|A_i\right\|^{2t}$, stability is preserved. When the recovery rates are reduced to $q_1 = 0.20$ and $q_1 = 0.10$, however, $\mu_i(t)\left\|A_i\right\|^{2t}$ becomes an increasing function of t as depicted in Fig. 6. This indicates that the left hand side of (69) is not necessarily bounded and thus stability of the system cannot be guaranteed.

B. Unknown GE model parameters

To demonstrate the impact of the dynamics of subsystems on the outcome of the learning algorithm, we first consider

This work is licensed under a Creative Commons Attribution 4.0 License. For more information, see https://creativecommons.org/licenses/by/4.0/

This article has been accepted for publication in IEEE Transactions on Automatic Control. This is the author's version which has not been fully edited and content may change prior to final publication. Citation information: DOI 10.1109/TAC.2023.3279902

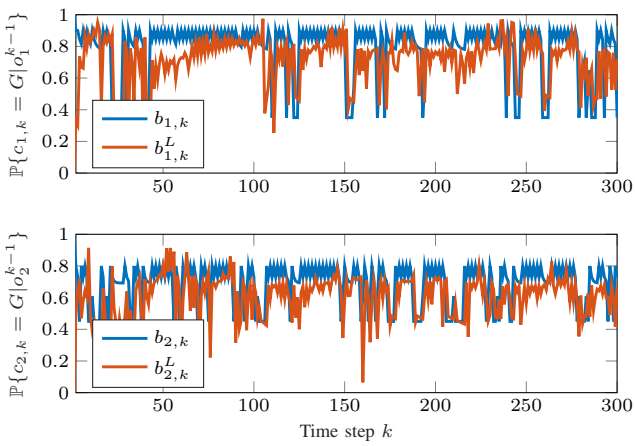

Fig. 7. Accuracy of the learned belief for two identical subsystems sharing a single channel.

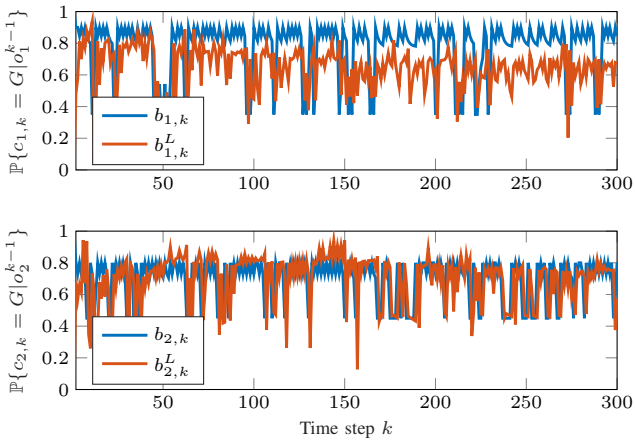

Fig. 8. Accuracy of the learned belief for two different subsystems sharing a single channel. Subsystem 1 (top) is less unstable ($A_1 = 1.05I_2$) than Subsystem 2 (bottom) with system matrix $A_2 = 1.2I_2$.

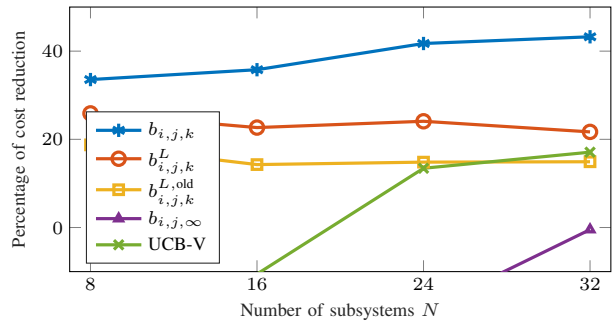

Fig. 9. Reduction in the average quadratic cost (9) achieved by using timer-setups with the known belief $b_{i,j,k}$ (38), learned belief $b_{i,j,k}^L$ (67), learned belief proposed in [1] denoted by $b_{i,j,k}^{L,\text{old}}$, stationary belief $b_{i,j,\infty}$ and UCB-V [58] as proposed in [37]. The number of available channels is $M = N/2$. A setup where the channels are selected randomly by utilizing $\text{CoIL}_{i,k}$ as the local measure in (21) is chosen as the benchmark.

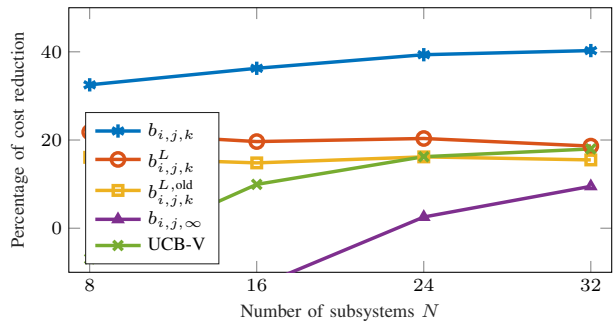

Fig. 10. Reduction in the average quadratic cost (9) achieved by using timer-setups with the known belief $b_{i,j,k}$ (38), learned belief $b_{i,j,k}^L$ (67), learned belief proposed in [1] denoted by $b_{i,j,k}^{L,\text{old}}$, stationary belief $b_{i,j,\infty}$ and UCB-V [58] as proposed in [37]. The number of available channels is $M = N/4$. A setup where the channels are selected randomly by utilizing $\text{CoIL}_{i,k}$ as the local measure in (21) is chosen as the benchmark.

the setup in the previous subsection, where two identical subsystems with $A = 1.2I_2$ compete for transmitting over one channel. Fig. 7 illustrates how their learned belief evolves over time compared with the actual belief (7) when the setup in (67) is utilized. Due to the identical dynamics and, consequently, identical growth rate for CoIL, both subsystems share the channel fairly, and both learn the belief with high accuracy. However, when the dynamics of Subsystem 1 change to $A = 1.05I_2$, Subsystem 2 is expected to transmit more frequently due to its larger eigenvalue, i.e., faster increase of CoIL. Consequently, Subsystem 2 observes the channel states more frequently, leading to higher accuracy of its learned belief, as depicted in Fig. 8.

C. Performance evaluation

To evaluate the performance of the proposed setups for solving Problem 3, we consider WNCSs with $N \in \{8, 16, 24, 32\}$ identical subsystems with $A = 1.2I_2$ and $M \in \{6, 12, 18, 24\}$ channels. The channel parameters are chosen randomly while satisfying $0.2 \leq p_{i,j}, q_{i,j} \leq 0.5$ for all i and j. As the benchmark, we consider a scenario in which a central coordinator prioritizes subsystems with respect to CoIL only and assigns a random channel to each of the M subsystems with the largest CoIL. As expected, with *a priori* knowledge of the transition probabilities of the GE model, the setup in (38) with the known belief $b_{i,j,k}$ significantly reduces the incurred cost as depicted in Fig. 9. This is in sharp contrast with adopting the stationary belief $b_{i,j,\infty}$ (8) which leads to the worst performance. Without any prior knowledge of the channel parameters, utilizing the learned belief from Algorithm 1 in setup (67) results in up to 25% lower cost. This setup outperforms the performance of the algorithm proposed in [1] which is represented by $b_{i,j,\infty}$. To demonstrate the significance of tailoring a learning method for the GE channel model, we compare the results with the timer setup proposed in [37] where UCB-V algorithm [58] is adopted for providing channel access over unknown i.i.d. channels. For smaller networks, this model mismatch leads to a considerable increase in cost. As the size of the WNCS grows, the number of unobserved channel states increases, which leads to more exploration of the learning method rather than exploitation. Nevertheless, even in such settings, Algorithm 1 leads to better performance in terms of reducing the cost (9). The same trend can be observed in heterogeneous WNCSs as illustrated in Fig. 10, where the dynamics of half the subsystems are changed to $A = 1.05I_2$.

This work is licensed under a Creative Commons Attribution 4.0 License. For more information, see https://creativecommons.org/licenses/by/4.0/

This article has been accepted for publication in IEEE Transactions on Automatic Control. This is the author's version which has not been fully edited and content may change prior to final publication. Citation information: DOI 10.1109/TAC.2023.3279902

VI. Conclusions and Future Directions

A. Conclusions

We presented a novel method for providing distributed channel access in WNCSs with correlated packet dropouts. We formulated the optimal channel access problem for minimizing the infinite-horizon LGQ cost as an MDP despite the partial observability of the channel state variations. We then adopted the concept of CoIL for circumventing the computational complexity of the MDP and showed that its computation requires no information exchange between subsystems. Based on this, we proposed a timer setup for providing distributed channel access by TBCoIL and derived the conditions under which implementing this mechanism ensures mean square stability of the system. We further investigated the scenario in which the underlying channel parameters are not known *a priori* and adopted a Bayesian framework for incorporating the information obtained by channel state observations in estimating the channel quality. We then proposed a computationally efficient heuristic algorithm which allows for control-aware exploration/exploitation via TBCoIL. The simulations showed that this setup leads to significant improvement compared with allocating the resources with respect to control performance only.

B. Future Directions

Interesting future research directions include considering the scenario in which the channel model varies over time and devising learning methods which are able to detect this variation and adapt accordingly. Another challenging open question is how can the stability framework be modified such that it is applicable to WNCSs containing both stable and unstable subsystems.

Acknowledgements

The work of T. Farjam was supported by the Academy of Finland under Grant 13346070. The work of T. Charalambous was supported partly by the Academy of Finland under Grant 317726 and the European Research Council (ERC) under the European Union's Horizon 2022 research and innovation programme (Grant agreement No. 101044629).

References

[1] T. Farjam, T. Charalambous, and H. Wymeersch, "Timer-based distributed channel access in networked control systems over known and unknown Gilbert-Elliott channels," in *European Control Conference (ECC)*, Jun. 2019, pp. 2983–2989.

[2] P. Park, S. C. Ergen, C. Fischione, C. Lu, and K. H. Johansson, "Wireless network design for control systems: A survey," *IEEE Communications Surveys & Tutorials*, vol. 20, no. 2, pp. 978–1013, Secondquarter 2018.

[3] B. Sinopoli, L. Schenato, M. Franceschetti, K. Poolla, M. Jordan, and S. Sastry, "Kalman filtering with intermittent observations," *IEEE Transactions on Automatic Control*, vol. 49, no. 9, pp. 1453–1464, Sep. 2004.

[4] L. Schenato, B. Sinopoli, M. Franceschetti, K. Poolla, and S. S. Sastry, "Foundations of control and estimation over lossy networks," *Proceedings of the IEEE*, vol. 95, no. 1, pp. 163–187, Jan. 2007.

[5] D. E. Quevedo, A. Ahlen, and K. H. Johansson, "State estimation over sensor networks with correlated wireless fading channels," *IEEE Transactions on Automatic Control*, vol. 58, no. 3, pp. 581–593, Mar. 2013.

[6] A. Ghaffarkhah and Y. Mostofi, "Communication-aware motion planning in mobile networks," *IEEE Transactions on Automatic Control*, vol. 56, no. 10, pp. 2478–2485, Oct. 2011.

[7] E. N. Gilbert, "Capacity of a burst-noise channel," *Bell System Technical Journal*, vol. 39, no. 5, pp. 1253–1265, Sep. 1960.

[8] E. O. Elliott, "Estimates of error rates for codes on burst-noise channels," *Bell System Technical Journal*, vol. 42, no. 5, pp. 1977–1997, Sep. 1963.

[9] M. Huang and S. Dey, "Stability of Kalman filtering with Markovian packet losses," *Automatica*, vol. 43, no. 4, pp. 598–607, Apr. 2007.

[10] E. G. W. Peters, D. E. Quevedo, and J. Ostergaard, "Shaped Gaussian dictionaries for quantized networked control systems with correlated dropouts," *IEEE Transactions on Signal Processing*, vol. 64, no. 1, pp. 203–213, Jan. 2016.

[11] Y. Mo and B. Sinopoli, "Kalman filtering with intermittent observations: Tail distribution and critical value," *IEEE Transactions on Automatic Control*, vol. 57, no. 3, pp. 677–689, Mar. 2012.

[12] P. Almstrom, M. Rabi, and M. Johansson, "Networked state estimation over a Gilbert-Elliot type channel," in *IEEE Conference on Decision and Control (CDC)*, Dec. 2009, pp. 2711–2716.

[13] L. Shi, P. Cheng, and J. Chen, "Sensor data scheduling for optimal state estimation with communication energy constraint," *Automatica*, vol. 47, no. 8, pp. 1693–1698, Aug. 2011.

[14] ——, "Optimal periodic sensor scheduling with limited resources," *IEEE Transactions on Automatic Control*, vol. 56, no. 9, pp. 2190–2195, Sep. 2011.

[15] D. Han, J. Wu, H. Zhang, and L. Shi, "Optimal sensor scheduling for multiple linear dynamical systems," *Automatica*, vol. 75, pp. 260–270, Jan. 2017.

[16] Y. Mo, E. Garone, and B. Sinopoli, "On infinite-horizon sensor scheduling," *Systems & Control Letters*, vol. 67, pp. 65–70, May 2014.

[17] S. Wu, X. Ren, S. Dey, and L. Shi, "Optimal scheduling of multiple sensors over shared channels with packet transmission constraint," *Automatica*, vol. 96, pp. 22–31, Oct. 2018.

[18] S. Wu, K. Ding, P. Cheng, and L. Shi, "Optimal scheduling of multiple sensors over lossy and bandwidth limited channels," *IEEE Transactions on Control of Network Systems*, vol. 7, no. 3, pp. 1188–1200, Sep. 2020.

[19] A. Forootani, R. Iervolino, M. Tipaldi, and S. Dey, "Transmission scheduling for multi-process multi-sensor remote estimation via approximate dynamic programming," *Automatica*, vol. 136, p. 110061, Feb. 2022.

[20] M. Nourian, A. S. Leong, and S. Dey, "Optimal energy allocation for Kalman filtering over packet dropping links with imperfect acknowledgments and energy harvesting constraints," *IEEE Transactions on Automatic Control*, vol. 59, no. 8, pp. 2128–2143, Aug. 2014.

[21] S. Knorn and S. Dey, "Optimal energy allocation for linear control with packet loss under energy harvesting constraints," *Automatica*, vol. 77, pp. 259–267, Mar. 2017.

[22] S. Knorn, S. Dey, A. Ahlen, and D. E. Quevedo, "Optimal energy allocation in multisensor estimation over wireless channels using energy harvesting and sharing," *IEEE Transactions on Automatic Control*, vol. 64, no. 10, pp. 4337–4344, Oct. 2019.

[23] A. Censi, "Kalman filtering with intermittent observations: Convergence for semi-markov chains and an intrinsic performance measure," *IEEE Transactions on Automatic Control*, vol. 56, no. 2, pp. 376–381, Feb. 2011.

[24] W. Liu, D. E. Quevedo, B. Vucetic, and Y. Li, "Stability conditions for remote state estimation of multiple systems over semi-Markov fading channels," *IEEE Control Systems Letters*, vol. 6, pp. 2954–2959, 2022.

[25] Y. Qi, P. Cheng, and J. Chen, "Optimal sensor data scheduling for remote estimation over a time-varying channel," *IEEE Transactions on Automatic Control*, vol. 62, no. 9, pp. 4611–4617, Sep. 2017.

[26] T. Farjam, H. Wymeersch, and T. Charalambous, "Distributed channel access for control over unknown memoryless communication channels," *IEEE Transactions on Automatic Control*, vol. 67, no. 12, pp. 6445–6459, 2022.

[27] A. S. Leong, A. Ramaswamy, D. E. Quevedo, H. Karl, and L. Shi, "Deep reinforcement learning for wireless sensor scheduling in cyber–physical systems," *Automatica*, vol. 113, p. 108759, Mar. 2020.

[28] W. Liu, D. E. Quevedo, Y. Li, K. H. Johansson, and B. Vucetic, "Remote state estimation with smart sensors over Markov fading channels," *IEEE Transactions on Automatic Control*, vol. 67, no. 6, pp. 2743–2757, Jun. 2022.

[29] A. Molin and S. Hirche, "On the optimality of certainty equivalence for event-triggered control systems," *IEEE Transactions on Automatic Control*, vol. 58, no. 2, pp. 470–474, Feb. 2013.

This work is licensed under a Creative Commons Attribution 4.0 License. For more information, see https://creativecommons.org/licenses/by/4.0/

This article has been accepted for publication in IEEE Transactions on Automatic Control. This is the author's version which has not been fully edited and content may change prior to final publication. Citation information: DOI 10.1109/TAC.2023.3279902

[30] C. Ramesh, H. Sandberg, and K. H. Johansson, "Design of state-based schedulers for a network of control loops," *IEEE Transactions on Automatic Control*, vol. 58, no. 8, pp. 1962–1975, Aug. 2013.

[31] M. Zanon, T. Charalambous, H. Wymeersch, and P. Falcone, "Optimal scheduling of downlink communication for a multi-agent system with a central observation post," *IEEE Control Systems Letters*, vol. 2, no. 1, pp. 37–42, Jan. 2018.

[32] A. Molin, C. Ramesh, H. Esen, and K. H. Johansson, "Innovations-based priority assignment for control over CAN-like networks," in *IEEE Conference on Decision and Control (CDC)*, Dec. 2015, pp. 4163–4169.

[33] T. Charalambous, A. Ozcelikkale, M. Zanon, P. Falcone, and H. Wymeersch, "On the resource allocation problem in wireless networked control systems," in *IEEE Conference on Decision and Control (CDC)*, Dec. 2017, pp. 4147–4154.

[34] M. Xia, V. Gupta, and P. J. Antsaklis, "Networked state estimation over a shared communication medium," *IEEE Transactions on Automatic Control*, vol. 62, no. 4, pp. 1729–1741, Apr. 2017.

[35] G. Walsh, H. Ye, and L. Bushnell, "Stability analysis of networked control systems," *IEEE Transactions on Control Systems Technology*, vol. 10, no. 3, pp. 438–446, May 2002.

[36] T. Farjam, T. Charalambous, and H. Wymeersch, "A timer-based distributed channel access mechanism in networked control systems," *IEEE Transactions on Circuits and Systems II: Express Briefs*, vol. 65, no. 5, pp. 652–656, May 2018.

[37] ——, "Timer-based distributed channel access for control over unknown unreliable time-varying communication channels," in *European Control Conference (ECC)*, Jun. 2019, pp. 2975–2982.

[38] B. Recht, "A tour of reinforcement learning: The view from continuous control," *Annual Review of Control, Robotics, and Autonomous Systems*, vol. 2, no. 1, pp. 253–279, May 2019.

[39] J. Wang, X. Ren, Y. Mo, and L. Shi, "Whittle index policy for dynamic multichannel allocation in remote state estimation," *IEEE Transactions on Automatic Control*, vol. 65, no. 2, pp. 591–603, Feb. 2020.

[40] A. R. Mesquita, J. P. Hespanha, and G. N. Nair, "Redundant data transmission in control/estimation over lossy networks," *Automatica*, vol. 48, no. 8, pp. 1612–1620, Aug. 2012.

[41] Z. Zou, A. Gidmark, T. Charalambous, and M. Johansson, "Optimal radio frequency energy harvesting with limited energy arrival knowledge," *IEEE Journal on Selected Areas in Communications*, vol. 34, no. 12, pp. 3528–3539, Dec. 2016.

[42] V. Gupta, B. Hassibi, and R. M. Murray, "Optimal LQG control across packet-dropping links," *Systems & Control Letters*, vol. 56, no. 6, pp. 439–446, Jun. 2007.

[43] B. D. O. Anderson and J. B. Moore, *Optimal Filtering*. Dover Publications, 2012.

[44] S. Wu, X. Ren, Q.-S. Jia, K. H. Johansson, and L. Shi, "Learning optimal scheduling policy for remote state estimation under uncertain channel condition," *IEEE Transactions on Control of Network Systems*, vol. 7, no. 2, pp. 579–591, Jun. 2020.

[45] P. Bartolomeu, M. Alam, J. Ferreira, and J. Fonseca, "Survey on low power real-time wireless MAC protocols," *Journal of Network and Computer Applications*, vol. 75, pp. 293–316, Nov. 2016.

[46] G. Chen, G. Chen, and S.-H. Hsu, *Linear stochastic control systems*. CRC Press, 1995.

[47] A. Bletsas, A. Khisti, D. Reed, and A. Lippman, "A simple cooperative diversity method based on network path selection," *IEEE Journal on Selected Areas in Communications*, vol. 24, no. 3, pp. 659–672, Mar. 2006.

[48] K. J. Astrom, *Introduction to Stochastic Control Theory*. Dover Publications Inc., 2006.

[49] C. H. Papadimitriou and J. N. Tsitsiklis, "The complexity of optimal queueing network control," in *Proceedings of IEEE 9th Annual Conference on Structure in Complexity Theory*. IEEE Comput. Soc. Press, 1994.

[50] S. Wang, T. Farjam, and T. Charalambous, "A priority-based distributed channel access mechanism for control over CAN-like networks," in *2021 European Control Conference (ECC)*, Jun. 2021, pp. 176–182.

[51] F. Kozin, "A survey of stability of stochastic systems," *Automatica*, vol. 5, no. 1, pp. 95–112, Jan. 1969.

[52] D. Bernstein, *Matrix Mathematics: Theory, Facts, and Formulas*. Princeton, N.J: Princeton University Press, 2009.

[53] J. R. Norris, *Markov Chains*, ser. Cambridge Series in Statistical and Probabilistic Mathematics. Cambridge University Press, 1997.

[54] S. Ross, J. Pineau, B. Chaib-draa, and P. Kreitmann, "A Bayesian approach for learning and planning in partially observable Markov decision processes," *Journal of Machine Learning Research*, vol. 12, no. 48, pp. 1729–1770, Jul. 2011.

[55] M. Strens, "A Bayesian framework for reinforcement learning," in *In Proceedings of the Seventeenth International Conference on Machine Learning*. ICML, 2000, pp. 943–950.

[56] M. J. A. Strens, "A Bayesian framework for reinforcement learning," in *Proceedings of the 17th International Conference on Machine Learning*. San Francisco, CA, USA: Morgan Kaufmann Publishers Inc., 2000, pp. 943–950.

[57] I. Krikidis, T. Charalambous, and J. S. Thompson, "Buffer-aided relay selection for cooperative diversity systems without delay constraints," *IEEE Transactions on Wireless Communications*, vol. 11, no. 5, pp. 1957–1967, May 2012.

[58] J.-Y. Audibert, R. Munos, and C. Szepesvári, "Exploration–exploitation tradeoff using variance estimates in multi-armed bandits," *Theoretical Computer Science*, vol. 410, no. 19, pp. 1876–1902, Apr. 2009.

Tahmoores Farjam (S'17) received the B.Sc. and M.Sc. degree in the Department of Mechanical Engineering from Sharif University of Technology, Iran, in 2014 and 2017, respectively. He is currently pursuing the Ph.D. degree with the Distributed and Networked Control Systems (DNCS) Group at the Department of Electrical Engineering and Automation, School of Electrical Engineering, Aalto University. His main research interests include wireless networked control systems and sensor networks.

Henk Wymeersch (S'01, M'05, SM'19) obtained the Ph.D. degree in Electrical Engineering/Applied Sciences in 2005 from Ghent University, Belgium. He is currently a Professor of Communication Systems with the Department of Electrical Engineering at Chalmers University of Technology, Sweden. He is also a Distinguished Research Associate with Eindhoven University of Technology. Prior to joining Chalmers, he was a postdoctoral researcher from 2005 until 2009 with the Laboratory for Information and Decision Systems at the Massachusetts Institute of Technology. Prof. Wymeersch served as Associate Editor for IEEE Communication Letters (2009-2013), IEEE Transactions on Wireless Communications (since 2013), and IEEE Transactions on Communications (2016-2018). During 2019-2021, he is a IEEE Distinguished Lecturer with the Vehicular Technology Society. His current research interests include the convergence of communication and sensing, in a 5G and Beyond 5G context.

Themistoklis Charalambous (S'05, M'10, SM'20) completed his PhD studies in the Control Laboratory, of the Engineering Department, Cambridge University. Following his PhD, he worked as a Research Associate at the Human Robotics Group at Imperial College London, as a Visiting Lecturer at the Department of Electrical and Computer Engineering at the University of Cyprus, as a Postdoctoral Researcher at the Department of Automatic Control of the School of Electrical Engineering at the Royal Institute of Technology (KTH), and as a Postdoctoral Researcher at the Department of Electrical Engineering at Chalmers University of Technology. He is currently an Assistant Professor leading the Distributed and Networked Control Systems (DNCS) Group at the Department of Electrical Engineering and Automation, School of Electrical Engineering, Aalto University, and a Research Fellow of the Academy of Finland. His primary research targets the design and analysis of (wireless) networked control systems that are stable, scalable and energy efficient. The study of such systems involves the interaction between dynamical systems, their communication and the integration of these concepts.

This work is licensed under a Creative Commons Attribution 4.0 License. For more information, see https://creativecommons.org/licenses/by/4.0/