THESIS FOR THE DEGREE OF DOCTOR OF PHILOSOPHY

Dynamic Reconfiguration of Electric Vehicle Battery Packs

From Lifetime-Potential Analysis through Practical Design to Real-Time Control

Albert Škegro

Department of Electrical Engineering
Chalmers University of Technology
Gothenburg, Sweden, 2026

Dynamic Reconfiguration of Electric Vehicle Battery Packs

From Lifetime-Potential Analysis through Practical Design to Real-Time Control

Albert Škegro

ISBN 978-91-8103-501-8

Acknowledgements, dedications and similar personal statements in this thesis reflect the author's own views.

© Albert Škegro 2026 except where otherwise stated.

Doktorsavhandlingar vid Chalmers tekniska högskola
Ny serie nr 5958
ISSN 0346-718X
DOI https://doi.org/10.63959/chalmers.dt/5958

Department of Electrical Engineering
Chalmers University of Technology
SE-412 96 Gothenburg, Sweden
Phone: +46 (0)31 772 1000

Printed by Chalmers Digital Printing
Gothenburg, Sweden, November 2026

Dynamic Reconfiguration of Electric Vehicle Battery Packs

From Lifetime-Potential Analysis through Practical Design to Real-Time Control

Albert Škegro
Department of Electrical Engineering
Chalmers University of Technology

Abstract

In conventional lithium-ion battery packs, fixed series-parallel connections allow the most degraded cells to limit pack performance, leaving healthier cells underutilised. Dynamic reconfiguration uses controllable switches to change these connections, but the added flexibility increases hardware costs, electrical losses and computational demands.

This thesis makes three contributions. First, a system-level assessment is developed to quantify the lifetime gains and economic value of reconfiguration. Under idealised control, median lifetime extensions reach approximately 10% for lithium iron phosphate (LFP) and 18% for nickel-manganese-cobalt (NMC) cells. However, lifetime extension alone offsets switching hardware cost only if it stays below approximately 3% of the pack price. Second, a scenario-based screening is developed to identify cost-effective switching granularity, defined as the number of cells switched together. Under the central assumptions, cell-level switching is not cost-effective, and the least costly grouped configurations break even only with maintenance rates at least 28% lower for LFP and 9% lower for NMC than conventional packs. Third, a ranking-based feasible-set restriction for mixed-integer model predictive control (RFSR-MI-MPC) is proposed to reduce the number of switching patterns from combinatorial to linear in cell count. In a 20-cell simulation, it achieves a mean optimality gap below 0.11% on jointly certified steps without power curtailment.

These findings provide a quantitative basis for jointly designing battery architecture, switching hardware and control. They support the development of reconfigurable packs that make fuller use of individual cell lifetimes, offering a path to longer service life, fewer premature pack replacements and more efficient use of battery resources.

Keywords: Reconfigurable battery systems, dynamic reconfiguration, lithium-ion batteries, battery ageing, lifetime extension, techno-economic analysis, model predictive control, mixed-integer optimisation, battery management systems, electric vehicles.

To Magdalena

List of Publications

This thesis is based on the following appended papers:

[A] **Albert Škegro**, Torsten Wik, Bo Bijlenga, Alexander Bessman, Changfu Zou, "System-Level Assessment of Dynamic Reconfiguration for Lifetime and Cost Outcomes in Electric Vehicle Battery Packs," *Nature Communications*, vol. 17, no. 1, art. 5980, Jul. 2026.

[B] **Albert Škegro**, Torbjörn Thiringer, Torsten Wik, Changfu Zou, "When Does a Reconfigurable Electric-Vehicle Battery Pay? Switching Granularity, Priced Switch Hardware, and Maintenance," manuscript to be submitted to a scientific journal.

[C] **Albert Škegro**, Quan Ouyang, Torsten Wik, Changfu Zou, "RFSR-MI-MPC: Ranking-Based Feasible-Set Restriction for Real-Time Control of Reconfigurable Battery Packs," submitted to *IEEE Transactions on Control Systems Technology*.

Other publications related to the thesis, not appended, are:

[D] **Albert Škegro**, Changfu Zou, Torsten Wik, "Analysis of Potential Lifetime Extension through Dynamic Battery Reconfiguration," *Proc. 2023 25th European Conference on Power Electronics and Applications (EPE'23 ECCE Europe)*, Aalborg, Denmark, Sep. 2023.

[E] **Albert Škegro**, Torsten Wik, Changfu Zou, "Reducing Combinatorial Redundancy in Mixed-Integer MPC via Ranking-Based Feasible-Set Restriction for Reconfigurable Batteries," accepted for presentation at the *65th IEEE Conference on Decision and Control (CDC)*, Honolulu, HI, USA, Dec. 2026.

[F] **Albert Škegro**, Antoine Laurin, Vincent Heiries, Rémy Thomas, Changfu Zou, "Pseudo-Random Switching of Cell Groups for On-Board Impedance Identification in Self-Reconfigurable Batteries," submitted to the *2027 American Control Conference (ACC)*, Philadelphia, PA, USA, Jul. 2027.

[G] **Albert Škegro**, Antoine Laurin, Vincent Heiries, Rémy Thomas, Changfu Zou, "A Convex Grid Estimator for Battery Identification from

Complementary Switching Records," submitted to the *2027 European Control Conference (ECC)*, Brussels, Belgium, Jul. 2027.

[H] Quan Ouyang, **Albert Škegro**, Lin Hu, Weiji Han, Dezhi Ren, Changyou Geng, Torsten Wik, Changfu Zou, "Mathematical Modeling for Reconfigurable Battery Systems with Parallel–Series Connections," *IEEE Transactions on Control Systems Technology*, vol. 34, no. 1, pp. 186–202, Jan. 2026.

[I] Shengyu Tao, **Albert Škegro**, Changfu Zou, "AC-Native Battery Systems," *Joule*, vol. 10, no. 6, art. no. 102496, Jun. 2026.

[J] Francesco Popolizio, **Albert Škegro**, Torsten Wik, Chih Feng Lee, Changfu Zou, "Online Energy Management for Bidirectional EV Charging with Rooftop PV: An Aging-Aware MPC Approach," *arXiv preprint* arXiv:2605.03844, 2026, submitted to a scientific journal.

[K] Xin Zhao, **Albert Škegro**, Kevin Jonathan Nesan Gnanaraj, Chenzhao Li, Changfu Zou, "Electric-Powered Air Traffic Network with Integrated Aircraft-Battery Modelling," *Proc. 12th Swedish Aerospace Technology Congress (FT2025)*, Stockholm, Sweden, Oct. 2025, *Linköping Electronic Conference Proceedings*, no. 215.

[L] Francesco Popolizio, **Albert Škegro**, Torsten Wik, Chih Feng Lee, Changfu Zou, "Long-Term Energy Management for Residential V2G/V2H Under Warranty-Based Battery Degradation Constraints," presented at the *52nd Annual Conference of the IEEE Industrial Electronics Society (IECON 2026)*, Doha, Qatar, Oct. 2026.

Software and data published by the author, which support the research in this thesis:

[M] **Albert Škegro**, "Simulation and Post-Processing Code for 'System-Level Assessment of Dynamic Reconfiguration for Lifetime and Cost Outcomes in Electric Vehicle Battery Packs'," software, version 1.0.0, Zenodo, Jun. 2026, DOI: 10.5281/zenodo.20632594.

[N] **Albert Škegro**, "Simulation Results for RFSR-MI-MPC: Ranking-Based Feasible-Set Restriction for Real-Time Control of Reconfigurable Battery Packs," dataset, version 1.0.0, Zenodo, Aug. 2026, DOI: 10.5281/zenodo.22134357.

[O] **Albert Škegro**, "RFSR-MI-MPC: Ranking-Based Feasible-Set Restriction for Reconfigurable Battery Packs," software, version 1.2.0, Zenodo, Aug. 2026, DOI: 10.5281/zenodo.22136253.

[P] **Albert Škegro**, "Simulation and Post-Processing Code for 'Reducing Combinatorial Redundancy in Mixed-Integer MPC via Ranking-Based Feasible-Set Restriction for Reconfigurable Batteries'," software, version 1.0.0, Zenodo, Sep. 2026, DOI: 10.5281/zenodo.22885592.

[Q] **Albert Škegro**, "Simulation and Post-Processing Code for 'Pseudo-Random Switching of Cell Groups for On-Board Impedance Identification in Self-Reconfigurable Batteries'," software, version 1.0.0, Zenodo, Oct. 2026, DOI: 10.5281/zenodo.23111636.

[R] **Albert Škegro**, "Convex Grid Estimator for Battery Identification from Complementary Switching Records: Research Code and Reference Results," software, version 1.0.0, Zenodo, Oct. 2026, DOI: 10.5281/zenodo.23699662.

[S] **Albert Škegro**, "Main-Study Simulation Traces for 'A Convex Grid Estimator for Battery Identification from Complementary Switching Records'," dataset, version 1.0.0, Zenodo, Oct. 2026, DOI: 10.5281/zenodo.23701669.

Contents

Abstract ii

List of Publications vii

Acknowledgements xv

Acronyms xxiv

I Overview 1

Author contributions 3

1 Introduction 5
- 1.1 Sustainable Electrification and Battery Lifetime 5
- 1.2 Battery Management Under Cell Heterogeneity 6
- 1.3 Reconfiguration as a Co-Design Opportunity 7
- 1.4 Aim and Thesis Argument 9
- 1.5 Research Questions 9
- 1.6 Thesis Contributions 11
- 1.7 Thesis Structure 11

2 Lithium-Ion Battery Packs: From Cell Heterogeneity to Dynamic Reconfiguration 13
- 2.1 Cell Behaviour, Chemistry and Heterogeneity 13
  - Operating Envelope and Cell States 13
  - Cell Chemistries Considered 14
  - Cell Heterogeneity and Ageing 14
- 2.2 Pack Coupling and the Weakest-Member Limitation 15
  - Electrical Coupling and Pack Hierarchy 15
  - Limiting Cells and Stranded Capability 15

2.3 Battery Management and Balancing . . . 16
2.4 Dynamic Battery Reconfiguration and Switching Granularity 17
Topology as a Control Resource . . . 17
Switching Granularity . . . 17
2.5 Implementation Constraints of Reconfigurable Battery Packs 18
Power Electronics and Commutation . . . 18
Reliability, Safety and Information . . . 18
2.6 Electric-Vehicle Application Context . . . 19
Pack Voltage and Series Count . . . 19
Use Intensity, Duty and Thermal Environment . . . 19
Battery Life-Cycle Economics . . . 19

3 Methodological Background 21
3.1 Decision Levels and the Model Chain . . . 21
3.2 Action Sets: From Fixed to Restricted Flexibility . . . 21
3.3 Cell and Pack Models . . . 23
3.4 Heterogeneous Populations and Lifetime Metrics . . . 24
3.5 Scenario Design and Uncertainty Propagation . . . 26
3.6 Techno-Economic and Architecture Evaluation . . . 26
3.7 Mixed-Integer Predictive Control . . . 28
3.8 Evaluation Protocols and Evidence . . . 29

4 System-Level Value of Dynamic Reconfiguration 31
4.1 From Cell Heterogeneity to System-Level Value . . . 31
4.2 Existing Evidence for Reconfiguration Benefits . . . 32
4.3 The Unresolved Comparison Problem . . . 32
4.4 Thesis Response to RQ1 . . . 33

5 Reconfiguration Granularity and Architecture Co-Design 35
5.1 Granularity as an Architectural Design Variable . . . 35
5.2 Implementation Trade-Offs . . . 35
5.3 Existing Approaches . . . 36
5.4 Thesis Response to RQ2 . . . 37

6 Computationally Reliable Real-Time Control 39
6.1 From Installed Flexibility to Online Decisions . . . 39
6.2 Combinatorial Structure and Computational Reliability . . . 40

6.3 Existing Approaches 40
6.4 Thesis Response to RQ3 41

7 Summary of Included Papers **43**
7.1 Paper A 43
7.2 Paper B 44
7.3 Paper C 46

8 Synthesis and Research Outlook **49**
8.1 What the Studies Show Together 49
8.2 Position Relative to Prior Work 51
8.3 Implications for Practice 52
8.4 Robustness of the Conclusions 53
8.5 Research Priorities 53

9 Conclusions **57**

References **61**

II Papers **73**

A System-Level Assessment of Reconfiguration **A1**

B Switching-Granularity Screen **B1**

C Real-Time Control via RFSR-MI-MPC **C1**

Acknowledgements

This thesis is the result of more than six years of work, a great deal of coffee and the patience of many people who walked this road with me.

The road to this PhD took shape in Zagreb. At FER, Professor Mato Baotić and Professor Silvio Hrabar believed in me, insisted that I should do a PhD and stood behind me as my references. Together with Professor Pina Milišić and Professor Branko Jeren, they wrote recommendation letters that have taken me further than I could have imagined.

Every PhD student needs a supervisor. I was lucky enough to have two, which meant twice the wisdom and twice the red ink. I am deeply grateful to my main supervisor, Professor Changfu Zou, and to my co-supervisor, Professor Torsten Wik, who was my main supervisor during the first four and a half years. They have given me freedom to explore and have never run out of time for me. Changfu, you taught me to care about every word, symbol and figure, and to aim higher than I thought I could. You trusted me before I trusted myself, and I will never forget you staying with me past one in the morning to push a paper out the door. Torsten, you were there from my very first weeks, when Sweden greeted me with missing bank cards, a missing ID card and landlords who would not answer, and you have been there ever since with knowledge, calm and kindness. When I was at my lowest, your steadiness and care carried me further than you may know.

A PhD at Chalmers comes with a small army of people who make sure you do not get lost, and mine was a very generous army. Professor Balázs Adam Kulcsár was the kindest and fairest examiner I could have wished for. He turned my appraisal talk into a real conversation and taught me where the zs goes in his name. Professor Erik Agrell, director of doctoral studies, trusted a slow bloomer. Professor Arman Oshnoei at Aalborg University turned my half-way seminar into a discussion that opened new directions for this work. Professor Torbjörn Thiringer has always found time for me. His office hours are whenever I knock, and his reply to a meeting request is the most un-Swedish two words imaginable, “Come now.” When I asked whether he would join a paper, the answer was just as brief, “Jipp, jipp.” A Swede on paper, but a Croatian at heart, for whom no coffee and no conversation ever needs booking. Christine and Natasha handled the practical matters, from my very first keycard and Swedish course to the papers that helped me find a home, and patiently answered my attempts at Swedish in Swedish.

Batteries look simple until you meet the people who build them. Bo Bijlenga at SEM AB (now PHINIA) deserves special thanks. Throughout BattVolt, I learned more from him than from anyone else outside academia, and his generosity with time and knowledge is matched only by his care, which once reached me in Croatia as a phone call after the 2020 earthquake. Jakob Ängeby, also at PHINIA, brought valuable discussions and joint proposals, and set an example of leadership I hope to follow one day. He shares my love of Värmland and, I hope, still has the address of the best tie shop in Croatia. Alexander Bessman at Scania, whose thesis I read in my very first weeks, later became my co-author. Meetings with Arvind Balachandran never felt long, thanks to his unparalleled laugh. All the BattVolt partners at Scania and Linköping University have my gratitude for their engagement.

A PhD rarely follows a straight line. Mine went from electric aircraft to charging a house with a Polestar. Xin took me into the air, and Francesco ("Mr. Popolizio") brought me back home with vehicle-to-home charging. Weiji and Quan paved the road for reconfigurable batteries at Chalmers before I arrived. Quan, Changfu, Torsten and I saw our SmartBrain project chosen for the 2024 IVA 100 List of the Royal Swedish Academy of Engineering Sciences and featured as one of five examples among 103 projects. Shengyu switched my thinking from DC to AC, and like any good inverter, he did it with minimal losses. I am grateful to have been part of a team that spans the past, present and future of reconfigurable battery research at Chalmers.

Research visits taught me that batteries behave the same on every continent, but lunch does not. Isabelle steered the TEAMING project and every one of my secondments. At CEA in Grenoble, Vincent hosted my stay, Antoine forgave me for leaving his white access card on the coffee machine, and with Rémy our long-promised "collabo batterie commutée" finally came true. Rémy, you hoped I would not miss French food too much. You have no idea how much I miss the CEA canteen. Sylvain and the whole team welcomed me into their French lab with open arms and corrected my French with equal enthusiasm. Quentin, whom I welcomed to Gothenburg before he welcomed me to Grenoble, made my time at CEA unforgettable and read this thesis with fresh eyes while writing his own. At McMaster University in Hamilton, Phil Kollmeyer gave me a desk, a seat in his battery course and, before long, the keys to his battery lab, where I proudly served as its self-appointed guardian.

Teaching taught me more than any course I took, mostly because students

ask the questions you hoped nobody would. Torsten let me take on more or less every role in his Linear Control System Design course except his own, and Veronica trusted me with her Logic Control course for five years, through more elevators and sausage slicers than any control engineer should ever program. Nikolče planned my teaching for years without a word of complaint about my questions, and Jonas, whose lecture I sat in during my first month, later gave me valuable feedback on my own.

My fellow teaching assistants shared labs, grading marathons and good humour with me. Rita turned lunch into a tradition. Constantin ("First Beard of Chalmers", sadly debearded) and I studied nonlinear systems together, taught in the same labs and spent years in the same dance classes. Then he traded Gothenburg for Mallorca. I miss him still, and I am more grateful than he knows. Mr. Popolizio stayed with me and our students until half past seven on the busiest lab day of the year, and Martina made every course we shared feel lighter. Attila showed students a patience matched only by his patience with me and my rusty German. Carina taught me to read a report as carefully as she does, and this thesis is better for it.

Ivo and Stefan adopted me before I had even found the coffee machine. In my second week, Ivo sent the email that made me feel at home in Sweden, "Idemo jesti ćevape?" It took us almost a month to actually sit down at that table, but the ćevapi were worth the wait, and so was everything that followed. Ankit taught alongside me in my very first semester, and his defence dinner, Fat Cow burger included, was one of my first tastes of PhD celebrations at Chalmers. Yicun organised our group photoshoot and shared my weakness for cameras. We still owe each other a photo walk, and he still owes my cameras a visit. Yao has been a quiet source of support since my first year and fought the lab's stubborn battery-testing software with me. Yang and I teamed up to tame dSPACE, and Carl-Johan patiently corrected my first Swedish homework until my written Swedish could stand on its own two feet, though my students may argue it still limps.

Yizhou and I built the battery lab from a procurement spreadsheet and celebrated the arrival of forty cells as if they were guests of honour. He trusted me with the digital side of both his licentiate and his PhD defence, drove me to Zeekr and told me that some things can only be learned by doing them. Xiaolei kept the eSoC group meeting and lunching together, wrote our battery lab routines with a care I could only comment on, and once received from

me a full guide to Gothenburg's second-hand shops. Huang and I taught our very first tutorials on the same day and studied optimal control together twice, and he was the better half of our assignment reports. Betlehem shared fikas, system identification and stories about Ethiopia with me.

Alvin and I served on the E2 PhD Council through statutes, snowstorms and snowed-in buses. I talked him into Deep Work, and he talked me into believing that our statute changes made a real difference for the PhD students who came after us. Johannes saw through every chess trap I set him, and still kindly called the outcome "highly unpredictable", the way a doctor tells you the injection will not hurt. Gabriel led the hat club with style, proving that a PhD needs both rigour and the right headwear, and thus setting the bar, and the hat, high. Rémi introduced me to frisbee golf in Slottsskogen, and Slottsskogen's trees to my frisbee, and Sten Elling and Maxi initiated me into the Swedish kräftskiva, where I learned that crayfish are eaten with paper hats, drinking songs and great seriousness. Newton's poker skills can only be matched by his sommelier skills. Daniel, our resident media star, organised our after-works, tried to conjure an electrochemistry course out of thin air and once came to lunch straight from a night lookout in the harbour. Raha is the fittest and the funniest Persian ambassador Sweden could have.

Adam, watching you grow from my student into a colleague has been one of the quiet joys of my PhD, and I am so proud of you.

To my Masterminds, Godwin ("The President"), Ahmet ("Big Dog"), Mattia ("Il Capo"), Faris ("Bro") and Anand ("Anandinho"), as iron sharpens iron, so you have sharpened me.

The President and I were in the trenches of the PhD together, from office 5433 and its stubbornly cold radiators to the adaptive control and system identification projects, two applications to visit China, a night of coding in shifts while one of us slept on the kitchen bench, and years of SSY285 exams. He was Chico to me, I was Braaah to him, and he called me "champ" so often that I began to believe it. He read my papers before anyone asked and closed every review with "Proud of you". It took a lot of convincing to get the President to Canada, but once there he scouted Hamilton ahead of me and sent my orders before I landed. Fufu with palm nut soup and jollof with fried beef were not optional. When Croatia met Ghana at the 2026 World Cup, we bet a bottle of rum. Vlašić headed the winner, and the President explained that Ghana lost on purpose to avoid tougher opponents. I am still waiting for

the rum, Mr. President, but I already have the better prize. We started in the same office, and we finish as brothers, within days of each other. Proud of you too, champ.

Ahmet-bey, the Big Dog, and I reopened five centuries of Ottoman–Croatian relations, this time without an army. The Ottomans never conquered all of Croatia, but Turkish TV series did, and Ahmet came to finish the job. Our diplomacy ran on burek, from burek weekends and burek-offs across Gothenburg to one December night when we filled the bureks ourselves, with tea, tapenade and history lessons on the side. He appointed me grand vizier, then tested my loyalty by trying to convert me to Turkish decaf. Five centuries of diplomacy had finally met an irreconcilable difference. When the Big Dog defended his thesis, his grand vizier cheered from across the ocean, prouder of his sultan than any imperial court could have been. And with my own printing deadline just days away, he still asked, "Is it too late to check your thesis?" Teşekkürler, kardeşim.

Il Capo and I ran the E2 PhD social life together, and he ran the logistics. He took me to a julbord at IKEA, which sounded strange and turned out perfect. I repaid him by inviting an Italian to lunch at a pizzeria, which he noticed at once. He was always ready to bring, and lend, his car, known to all of us simply as the Car. He even made me its co-host on a car-sharing app, until the notification emails defeated me. He watered my plants when I was away, and in the final weeks he offered to read the entire thesis. Grazie mille, Capo.

Bro, Dr. Faris, now Professor Faris, began as the colleague who knocked on my door with "As usual, some exercise-related questions" and became the friend I shared lunch boxes with at 11.15 sharp (11.30 if he overslept). He spent Valentine's Day at an African restaurant with the Big Dog and his grand vizier. He gave up a Saturday to help me move and left behind his cap and water bottle as proof. I still remember the morning when none of the office keys would open the door. Between paddy fields, small snakes and a conference on Lombok, he read my thesis and promised to watch the defence online. Bro, the ćevapčići in Zagreb are waiting for you.

Anandinho and I decoded active sets together in our first year and taught together for years. He was my pitch coach before the IVA 100 jury, my cinema companion and my guide through every dosa on the Madras Masala menu, until he declared that I was "developing a taste for South Indian". He helped

turn our Sunday lunches into a Masterminds forum. He still owes Croatia a visit.

Together you carried my boxes, and together we shared iftars, burek nights and Friday dinners, and rehearsed each other's defences until no slide was safe. One by one, you defended before me, leaving me the last Mastermind standing. And when my turn finally came, every one of you offered to read my thesis. My PhD would not have been the same without you.

Amal, Mama Duck of the E2 ducklings, has been my neighbour and my fika companion. When fever knocked us down in turn, we left bananas and soup for each other and looked after one another from across the corridor. Soon it will be my turn to cheer at her defence. Say hi to Mocha from me.

I also thank Sondre, Isac and Filip, Lasse, Sabino, Benedick, Ilya, Qingbo, Yixiao, Muddassar, Masoud, my officemate Francesco, Yara, and all my co-authors and colleagues in Systems and Control and across E2, for the shared fikas, lunches, corridor talks and good company that made every working day lighter.

Ninoslav, Miroslava and Chalmers Digitaltryck printed my posters and, with great kindness and flexibility, this thesis while I was abroad. Ulrika Ernström and Sandra Tavakoli turned our Nature Communications paper into a story the public could enjoy, and Cathrine Helin and ABB made the Gunnar Engström Scholarship a day I will not forget.

This work was financially supported by the Swedish Research Council (grant 2023-04314), by the European Union's Horizon Europe programme through the Marie Skłodowska-Curie Actions (grant agreement 101131278), and by Mistra, the Swedish Foundation for Strategic Environmental Research, through the BattVolt project within Mistra Innovation 23 (2020–2023). I also thank Gunnar Engströms ABB-stiftelse for a research scholarship in 2025.

Computational resources were provided by Chalmers e-Commons and by the National Academic Infrastructure for Supercomputing in Sweden (NAISS), funded by the Swedish Research Council.

Beyond the university, many people helped me find a home far from home. Kristina, her mother Elżbieta and the Knežević family helped me through my first days in Sweden, and Danijel Miljanović helped me make sense of the country in the years that followed. My Swedish teachers, Iva and Lars, helped me find my voice in a new language. Yohan and Yann were part of my time in France. And my great-aunts Anđa and Fila, together with the Pejaković

family, cared for me during my stay in Canada, from the pumpkin patch to my trip to Montreal.

To my friends in Croatia and around the world, thank you for your time, prayers, encouragement and many acts of kindness.

Grgo, you turned our friendship into a long-running Nordic operation. Somewhere along the way I became your purchasing department for vintage Levin guitars, hunting them on Blocket and chasing sellers from Stockholm to Blekinge, until I knew Sweden the way a birdwatcher does, one rare sighting at a time. The second-hand market surely owes us a loyalty card. When the PhD felt endless, you suggested that we both move to America instead. I stayed, but we made it there anyway, and New York was worth every year of waiting.

Ivan Porin, you know the peculiar double shift of a doctorate beside a full-time job. You checked on me through every rough patch, and we traded worries, CVs, small victories and competitive snow reports between Graz and Gothenburg. We were two climbers on neighbouring mountains, shouting encouragement across the valley. I am so proud of you, and I cannot wait to see you reach your summit.

Martin, you taught me that perfume is a language, that a suit deserves a good tailor and that the fairest division of labour in a kitchen is that you cook and I eat. Your coffee is ready before a 4:30 shift, which I still consider a superpower. You know the PhD road from the inside, so when I stood at a crossroads, you understood me without a single word of explanation. You were also by my side for the most memorable night out of my life.

Lukas, you brought jokes that no bad day could survive, a faith that God works always, everywhere and through everything, and a scientifically rigorous answer to whether a sweet potato weighs 600 grams raw or 350 grams roasted. In 2022 you started saving to visit me in Sweden. By my calculations, you must be rich by now, so the guest bed is waiting and the cafés are air-conditioned.

Zvonimir, Marko, Vjekoslav, Branko and many others kept a place at their table for me every time I came home, as if I had never left. Emilio, Omri and Jaume never gave up on me, even when I was hard to reach.

If you are reading this and do not find your name, know that you have not been forgotten. There are many more of you than these pages can hold. I carry you in my heart and keep you in my prayers.

Father Mladen, your balcony hosts the best barbecue in Gothenburg, and you never let a hungry student leave without a full plate.

I know I have often been absent while working on this thesis. Thank you everyone for your understanding. I hope to repay it by being more present in the years ahead.

To my family, thank you for your patience, understanding and love, for the sacrifices that made my education possible, and for supporting me from afar through all these years abroad.

Mom, thank you for the gift of life and for trusting me, even when my road led far from home. You passed on to me the conviction that every new language opens a new door. I have walked through many of them, thanks to you. Dad, thank you for teaching me that an education should be wide as well as deep. You expected me to know the lives of the Roman emperors as well as how to fix whatever broke around the house. Ivan and Mihael, my brothers, thank you for finding time for a brother who was always somewhere else, and for every coffee and every call that kept me honest. I am proud of the men you are becoming.

Teta Žana, thank you for being my biggest supporter since I was a child. You are my bargain hunter and the keeper of our family's letters and memories, and no one signs a message with more love than you. Uncle Marin, thank you for never letting me forget my roots and for the camera with which I shot roll after roll of film in Gothenburg. When I was a kid, you made me your apprentice in demolishing walls, assembling furniture, hanging doors and moving everything too bulky and heavy for one person, and those skills have served the people around me as much as they have served me. While I was finishing this book, I had the joy of helping you with yours, and I hope it will soon see the light of day too. Kum Đani, Kuma Davorka and the Benčić family, thank you for keeping me supplied with the best olive oil in Croatia, for being the most faithful audience my photographs have ever had, and for carrying me in your prayers. Matej, my cousin, thank you for your timely visit, for every long call and for still hoping for the return of my Viking beard.

Grandma and Grandpa, you met at a teachers' college when almost no one in Herzegovina studied beyond four grades, and you have both spent your lives teaching. You taught us that no village is too small and no road too long for learning. I was blessed with teachers who believed the same. My teacher Snježana Ivković and my homeroom teacher, Karolina Mustapić, recognised the potential in a shy boy in elementary school. Grandma, you gave me my love of reading and crocheted the socks that kept me warm as a child. One

day I hope to crochet a pair for you. Grandpa, you were the first to put a battery cell in my hand, and not long after, you bought me a rechargeable one with its own charger for my remote-controlled toy. My awe in that moment was a seed that took many years to grow into this thesis. Long before the road led to Zagreb, it began in your hands. I cannot wait to put the finished book in them.

To my sister Magdalena, my angel, no matter how long I have been away, the way you greet me when I come home reminds me of what truly matters in life. This thesis is for you.

Above all, I thank God for the gift of life and for the strength to finish this work. I entrust my gratitude to Mary, Help of Christians, for her protection and intercession, and to Saint Joseph, whose quiet faithfulness in daily work has been an example to me.

Albert Škegro
Gothenburg, November 2026

Acronyms

AC:	Alternating current
BMS:	Battery management system
CBP:	Conventional battery pack
EV:	Electric vehicle
LFP:	Lithium iron phosphate
LHS:	Latin-hypercube sampling
MICP:	Mixed-integer convex programme
MI-MPC:	Mixed-integer model predictive control
MOSFET:	Metal–oxide–semiconductor field-effect transistor
MPC:	Model predictive control
NMC:	Nickel-manganese-cobalt
NPC:	Net present cost
O&M:	Operation and maintenance
OCV:	Open-circuit voltage
RBP:	Reconfigurable battery pack
RC:	Resistor-capacitor
RFSR:	Ranking-based feasible-set restriction
RFSR-MI-MPC:	Ranking-based feasible-set restriction for mixed-integer model predictive control
RQ:	Research question
SGS:	Switching-granularity screen

SOC:	State of charge
SOH:	State of health
V2G:	Vehicle-to-grid
V2H:	Vehicle-to-home
WLTC:	Worldwide harmonized Light vehicles Test Cycle
WLTP:	Worldwide harmonized Light vehicles Test Procedure

Part I

Overview

Author contributions

Paper A

Albert Škegro: Conceptualisation, Formal analysis, Investigation, Methodology, Software, Validation, Visualisation, Writing (original draft), Writing (review & editing).
Changfu Zou: Conceptualisation, Formal analysis, Funding acquisition, Investigation, Methodology, Project administration, Supervision, Validation, Visualisation, Writing (original draft), Writing (review & editing).
Torsten Wik: Formal analysis, Funding acquisition, Supervision, Validation, Writing (review & editing).
Bo Bijlenga: Formal analysis, Funding acquisition, Validation, Writing (review & editing).
Alexander Bessman: Formal analysis, Validation, Writing (review & editing).

Paper B

Albert Škegro: Conceptualisation, Formal analysis, Investigation, Methodology, Software, Visualisation, Writing (original draft), Writing (review & editing).
Torbjörn Thiringer: Methodology, Validation, Writing (review & editing).
Torsten Wik: Formal analysis, Methodology, Supervision, Writing (review & editing).
Changfu Zou: Conceptualisation, Funding acquisition, Methodology, Project administration, Supervision, Writing (review & editing).

Paper C

Albert Škegro: Conceptualisation, Formal analysis, Investigation, Methodology, Software, Validation, Writing (original draft), Writing (review & editing).

Torsten Wik: Conceptualisation, Supervision, Validation, Writing (review & editing).
Quan Ouyang: Validation, Writing (review & editing).
Changfu Zou: Funding acquisition, Supervision, Validation, Writing (review & editing).

Chapter 1

Introduction

1.1 Sustainable Electrification and Battery Lifetime

Electrification can reduce the life-cycle climate impact of road transport, especially as electricity generation is decarbonised. Comparative pathway analysis finds that battery-electric passenger cars have lower carbon footprints than combustion-based alternatives across a range of energy-system decarbonisation scenarios [1]. Meanwhile, with the continued growth of electric-vehicle deployment, batteries in service are increasing both in numbers and in total capacity [2]. Reducing the climate impact of these batteries therefore requires more than producing batteries with higher specific energy, lower cost and less use of resources. Reducing that impact also requires using the batteries already installed in vehicles more fully, for as long as they remain safe and useful.

Battery lifetime matters at several levels simultaneously. For the vehicle user, battery degradation reduces available range and power and can necessitate expensive battery-pack replacement. Within the battery pack, premature retirement caused by a small number of limiting battery cells can leave usable capacity and power capability in the remaining cells inaccessible. At the wider system level, extending useful first life can defer battery-pack replacement [3] and change the timing and relative economic and environmental merits of continued first use, repurposing and recycling [4]. These outcomes depend on cell chemistry and also on how cells are assembled, monitored and operated as a pack.

If battery packs can use their constituent cells more fully, tolerate differences among them for longer, and avoid replacement caused by a small number of limiting cells, electrified transport can get more service from the batteries already in use. The corresponding technical challenge is one of battery

management.

1.2 Battery Management Under Cell Heterogeneity

A traction battery pack is assembled from cells that are nominally identical but never perfectly interchangeable. Variations in materials and manufacturing produce distributions of initial capacity and resistance, and non-uniform current and temperature cause different operating histories that, with time, produce ageing differences [5], [6], [7], [8]. Capacity and internal resistance therefore form cell-to-cell distributions that no single pack-wide value describes adequately.

The battery management system must keep every cell within its electrical, thermal and safety limits while estimating states that cannot all be measured directly [9], [10], [11]. In a fixed series-connected string, all cells carry the same current but do not reach their operating limits simultaneously. Consequently, pack current, and therefore power, must be reduced or interrupted when any cell reaches its upper-voltage or temperature limit during charging, or its lower-voltage or temperature limit during discharge. Pack capability is thus governed by the first cell to reach the active limit [12], [13].

When a limiting cell constrains the string, the remaining cells may retain charge, energy, power capability or service life that cannot be exposed at the pack terminals. A high-resistance cell, for example, can strand power even when charge remains. Capability that is inaccessible because another cell or group of cells has reached a limit is here called stranded capability. A multi-year analysis of electric-vehicle field data has shown that cell-to-cell inconsistency can considerably reduce pack lifetime, power capability and lifetime energy utilisation [14].

Conventional battery management monitors cell-to-cell differences and limits their effect on pack performance and safety, while keeping the connections made during manufacture. Most passive and active balancing circuits redistribute or dissipate energy to reduce differences in state of charge, but they leave every cell in the pack's power path [15], [16]. Consequently, these methods mitigate heterogeneity without removing the architectural mechanism by which a limiting cell constrains the string. The difference between mitigating heterogeneity and removing its mechanism motivates a different response, a connection structure that is itself controllable.

1.3 Reconfiguration as a Co-Design Opportunity

Dynamic reconfiguration allows a controller to engage, bypass or isolate individual cells or groups of cells during operation and, in some circuits, also to change which of them are connected in series or in parallel [17], [18], [19]. Pack topology then becomes a controllable resource. A degraded, hot or fully charged unit need not impose the same constraint on every other unit if its participation and exposure to current can be changed.

The relevant design variable is the extent and resolution of the pack's control authority over topology. Switching may occur at the cell, group, module or string level. The number of series-connected units, each a cell or a parallel block of cells, that are switched together as one group is here called the switching granularity k (Figure 1.1). Fine granularity can address heterogeneity down to the level of individual cells. It also requires more switching paths, gate drives, sensors, interconnections and validation effort, and the losses of the resulting architecture depend on topology, device selection and operating point [18], [20], [21]. Granularity is therefore an architectural choice with electrochemical, power-electronic, economic and reliability consequences.

In this thesis, flexibility means the set of switch configurations, that is, which cells or groups are engaged or bypassed, that a pack can take. Installed flexibility also creates a discrete online decision problem. A controller must select a feasible topology, or a feasible subset of cells or groups, that meets the requested pack power while respecting all cell-level constraints. As control resolution increases, the admissible action space can grow combinatorially. The resulting control problem can be formulated as mixed-integer predictive control, but worst-case and tail solver times determine whether the control law is operationally usable [22], [23], [24].

Reconfiguration therefore turns the limiting-cell problem from a battery-management constraint into a co-design problem. Flexibility must first create sufficient system-level value to merit consideration. A justified portion of that flexibility must then be implemented in hardware, and a usable portion of the resulting action space must be exploited within the online computational budget.

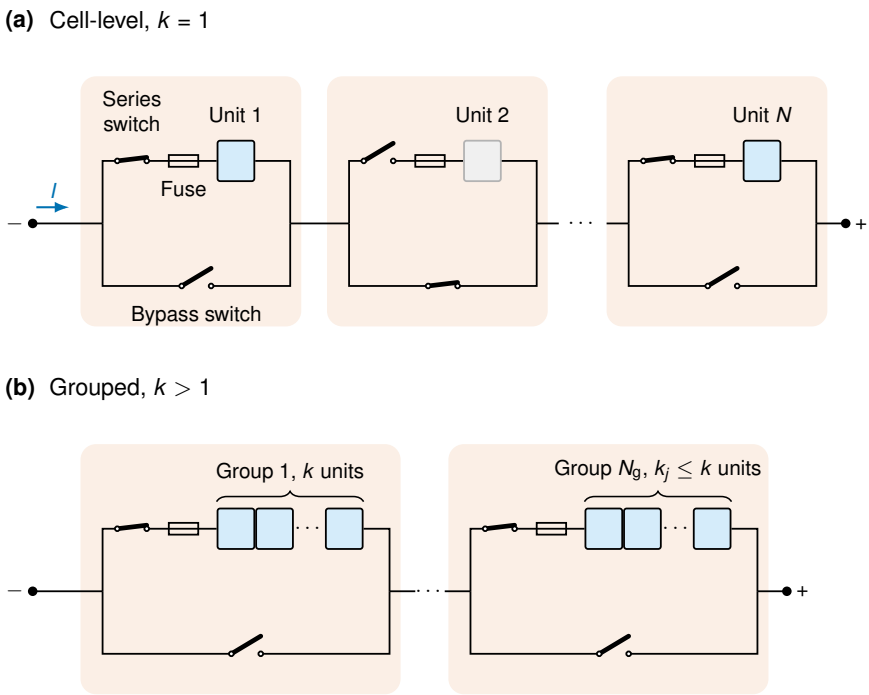

Figure 1.1: Reconfigurable battery string of N effective units in series, each a cell or a parallel block of cells. (a) Cell-level reconfiguration ($k = 1$), the case studied in Papers A and C. Every unit has a series switch and a bypass switch, so it can be engaged or bypassed independently. Paper B adds a fuse in series with every series switch. (b) Grouped reconfiguration ($k > 1$), screened in Paper B. Groups of k units are wired in hard series behind one series switch and one bypass switch, so the string has $N_{\mathrm{g}}(k) = \lceil N/k \rceil$ groups, the last one smaller when k does not divide N, and each group serves only as long as its weakest unit.

1.4 Aim and Thesis Argument

The aim of this thesis is to determine how dynamic reconfiguration of lithium-ion battery packs can be valued, architected and controlled so that the physical flexibility introduced by switching hardware can be justified and exploited under lifetime, economic, computational and operational constraints. The central proposition of the thesis is:

> **Practical battery reconfiguration is a co-design problem in which physical flexibility is valuable only to the extent that it can justify its hardware and computational costs.**

This thesis examines the proposition at three levels. Paper A asks whether and under what conditions reconfiguration creates system-level value. Paper B starts from the cells simulated in Paper A and asks how much of the idealised flexibility considered there should be physically implemented. Paper C asks how much of the action space of a pack with individually switched cells can be exploited computationally during operation. Paper A informs both other papers, whereas Paper C addresses the online level separately and does not build on the results of Paper B (Figure 1.2).

1.5 Research Questions

The three levels lead to three practical research questions.

RQ1: System-level value. Under what conditions, and through which mechanisms, can dynamic battery reconfiguration extend battery lifetime and improve system-level economic outcomes?

RQ2: Physical implementation. How should switching granularity be selected when electrochemical utilisation, hardware cost, electrical losses and the energy still available after faults are considered jointly?

RQ3: Computational exploitation. How can the combinatorial flexibility of reconfigurable batteries be exploited through predictive control while maintaining the computational reliability required for online operation?

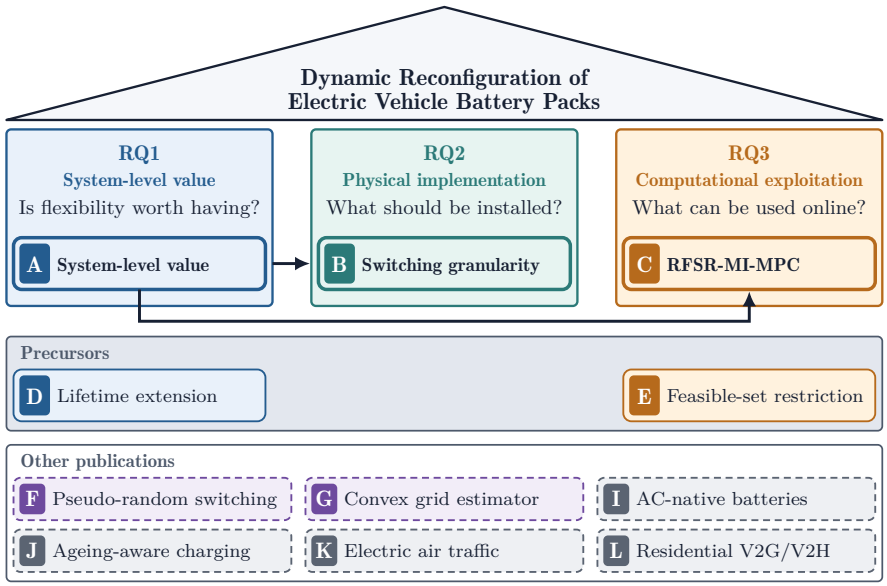

Figure 1.2: Research questions, the appended papers that answer them, their precursors and the other publications. Letters follow the List of Publications.

1.6 Thesis Contributions

This thesis makes three principal contributions, one for each research question.

Contribution 1: Conditions for System-Level Value

A statistically grounded system-level assessment [A] connects cell heterogeneity, pack architecture, degradation, vehicle use and economic mechanisms, building on an earlier idealised lifetime analysis [D]. It characterises the conditions under which reconfiguration can relieve weak-cell constraints, extend service life and reduce net present cost, together with the assumptions that bound those findings.

Contribution 2: Granularity-Explicit Architecture Co-Design

The switching-granularity screen (SGS) treats switching granularity as a design variable. It weighs the lifetime extension that each group size retains against switch hardware sized for the string current, per-group protection and the conduction loss of driving and charging. It then evaluates the discounted lifetime cost against a conventional pack, together with the energy still available after faults. The screen thereby identifies the least costly group sizes and the maintenance saving that reconfiguration must achieve to pay [B].

Contribution 3: Computationally Usable Fine-Grained Flexibility

Ranking-based feasible-set restriction (RFSR) for mixed-integer model predictive control reduces the set of switching decisions considered online while leaving the installed hardware degrees of freedom unchanged. The restriction makes fine-grained flexibility tractable for real-time control in the simulated 16- to 24-cell packs. The contribution is supported by the methods developed in [C], [E] and by the control-oriented pack modelling developed in [H].

1.7 Thesis Structure

Part I develops the argument introduced above. It first explains how cell behaviour, heterogeneity, fixed pack construction, balancing and power-electronic

constraints motivate dynamic reconfiguration, and defines the comparative modelling, simulation and evaluation methods used to support claims across the different design levels. It then reviews the literature and identifies the research gaps for system-level value, reconfiguration granularity and computationally reliable real-time control, and summarises the principal findings of each appended paper. Finally, it integrates the findings, states the boundaries of the evidence, develops the research outlook and answers the research questions. Part II contains the three appended papers.

Chapter 2

Lithium-Ion Battery Packs: From Cell Heterogeneity to Dynamic Reconfiguration

Dynamic reconfiguration alters the electrical connections within a battery pack, but its benefits and limitations stem from cell behaviour and from the application in which the pack is used. Whether topology can serve as a controllable system resource, and what limits its use, therefore depends on the properties of the battery, the pack and the vehicle.

2.1 Cell Behaviour, Chemistry and Heterogeneity

Operating Envelope and Cell States

A lithium-ion cell stores energy through reversible lithium transfer between two host electrodes [25]. The resulting open-circuit voltage (OCV) depends mainly on lithium distribution and hence state of charge (SOC), with additional temperature, hysteresis and relaxation effects. When current flows, ohmic resistance, charge-transfer kinetics and concentration gradients cause overpotentials [26], so the terminal voltage differs from the OCV [27]. Safe operation is bounded by voltage, current and temperature limits whose margins depend on cell state and operating conditions [9], [11], [28].

Capacity is the charge available between specified limits. Polarisation and temperature are comparatively fast dynamic states, evolving within a cycle, while capacity loss and resistance growth are slower degradation properties. State of health (SOH) summarises such changes relative to a reference, com-

monly the new-cell values [29], and is judged against an application-specific end-of-life criterion [11], [30].

Terminal voltage, pack current and selected temperatures are measured, whereas SOC, polarisation, capacity and resistance are inferred. Noise, bias, uncertain initial conditions, parameter drift and model mismatch therefore affect the estimated distance of each cell from its constraints [10], [11]. Battery management, and any reconfiguration decision built on it, must act on these uncertain quantities, which also evolve on different time scales [29].

Cell Chemistries Considered

The thesis considers two cathode chemistries, both paired with graphite anodes, namely lithium iron phosphate (LFP) and lithium nickel-manganese-cobalt oxide (NMC). Papers A and B use the published models of a cylindrical LFP/graphite cell [31] and a cylindrical NMC/graphite cell [32], [33] with a 1:1:1 transition-metal ratio [34].

The two families differ in OCV profile, specific energy, cost and ageing behaviour [35], [36]. The shape of the OCV-SOC curve affects how clearly voltage measurements distinguish cells at different SOC, and therefore how well an engagement decision can be informed. The LFP curve is flat over much of the SOC range, which weakens SOC observability from voltage alone [37], [38]. Cost differs too. BloombergNEF reported 2025 average pack prices of USD 81/kWh for LFP and USD 128/kWh for NMC [39], so the same switching-hardware premium is a larger relative burden on an LFP pack. In the published models for the two cells, ageing depends differently on time, temperature, SOC and throughput [33], [40], [41], so conclusions for one do not transfer automatically to the other.

Cell Heterogeneity and Ageing

Manufacturing variation produces distributions of initial capacity, resistance and self-discharge [5], [8]. Sorting reduces the spread in selected measured properties, yet beginning-of-life similarity does not guarantee common long-term behaviour [6], [42]. After assembly, cooling geometry, contact resistance, pressure and thermal boundary conditions give cells different current, temperature and SOC histories [12]. Shared production and operating conditions can also group cells into sub-populations within a production batch, by position

along a cooling circuit or through shifts common to a whole pack, so cells need not vary independently [6], [7], [43].

Ageing is commonly separated into calendar and cycle contributions. Calendar ageing depends strongly on elapsed time, temperature and storage SOC, whereas cycle ageing depends on charge throughput, current rate, cycling range and temperature. The separation is largely a modelling convention, since calendar ageing continues during cycling, at the SOC and temperature of cycling, and cycle ageing is obtained by subtracting that calendar estimate [33], [41].

Electrical, thermal and ageing differences can reinforce one another. Resistance produces heat [44], temperature changes capacity-loss and resistance-growth trajectories, and unequal heat rejection gives cells divergent trajectories. Dynamic duty cycles can also yield different ageing from matched constant-current tests because current pulses and time-dependent ageing are lost through averaging [45]. Pack design therefore concerns a distribution of evolving cell trajectories.

2.2 Pack Coupling and the Weakest-Member Limitation

Electrical Coupling and Pack Hierarchy

Series connection adds terminal voltages and imposes a common branch current, while parallel connection imposes a common terminal voltage while branch currents divide according to state, impedance, temperature and interconnection resistance. A series-parallel pack therefore cannot be described by one uniform cell current and state [12]. Physical packs organise cells into parallel groups, modules and strings alongside sensing, protection, cooling and structural hardware. This hierarchy fixes which quantities can be observed and which elements can be controlled independently.

Limiting Cells and Stranded Capability

In a fixed series path, charging, discharging or power delivery must change when any participating cell or parallel group reaches an active voltage, SOC, temperature or safety constraint. Which unit limits operation depends on

current direction, magnitude, temperature, state and requested service. Low capacity accelerates traversal of the usable SOC interval, high resistance increases voltage deviation and heat, and an unusual temperature can impose a thermal or power limit [13], [14].

Cell end of life denotes an individual cell crossing a specified capacity, resistance, power or safety threshold. Pack end of life denotes failure to meet the application requirement under the adopted interconnection, control and maintenance policy. Whenever one unit limits the string, before or at pack end of life, the non-limiting units can hold stranded capability.

Because a fixed series string is governed by its most extreme member [6], [7], adding cells in series increases the chance that the string contains a cell far from the population average, even when the cell population itself is unchanged [14]. Correlated production and operating histories change the size of this series-count effect but do not remove it unless the correlation is complete.

2.3 Battery Management and Balancing

The battery management system (BMS) keeps cells within electrical, thermal and safety limits while making pack capability available to the vehicle. It combines distributed voltage and temperature measurements with pack-current measurement and models to estimate SOC, power capability, capacity and resistance. Those estimates support power limitation, thermal coordination, contactor control, isolation monitoring, fault detection and communication [9], [10]. In a fixed architecture, a local fault or limiting cell may still require pack derating, module disconnection or opening the main contactors, because detection alone does not create a path around the affected unit [17], [28].

Cell balancing manages differences in charge or another estimated state. Passive circuits dissipate energy from selected cells, while active circuits transfer energy between cells, modules or a common bus [46]. Balancing targets may be terminal voltage or SOC [9], [15], [16], or a model-based quantity [47]. Balancing can correct a reversible state mismatch, but it cannot restore capacity, undo resistance growth or remove a degraded unit from a fixed series path. A lower-capacity cell therefore traverses its usable interval sooner after SOC has been aligned, and a higher-resistance cell retains its larger voltage deviation under load [13], [48].

2.4 Dynamic Battery Reconfiguration and Switching Granularity

Topology as a Control Resource

A reconfigurable battery adds controllable semiconductor or electromechanical paths so that cells or groups can be engaged, bypassed, isolated or rested. Some architectures can also change series-parallel relationships or synthesise a varying output voltage [17], [18], [19], [49]. Bypassing a limiting unit can preserve service through healthier units, alternating engagement can redistribute utilisation, and isolation can support fault containment and degraded operation [50], [51]. Unlike balancing, these actions change which units carry the main current. Selective engagement can still serve balancing, but bypass and isolation are added architectural capabilities [19], [48].

Switching Granularity

Switching granularity is the resolution at which the pack can act on its cells or parallel blocks of cells (Figure 1.1). At cell-level granularity, each cell or parallel group can be engaged or bypassed independently. At coarser granularity, several units are wired permanently in series behind one bypass path and change participation together, so one weak member constrains its healthy neighbours and isolating one fault removes the whole group.

Finer granularity exposes more heterogeneity to control and improves isolation resolution. It also adds controllable paths, gate drivers, isolated supplies, sensing, communication and possible configurations [18], [52]. Coarser granularity reduces path count, but the switches of a larger group must block a higher voltage, and every group embeds a fixed weakest-member substructure inside the pack [B].

2.5 Implementation Constraints of Reconfigurable Battery Packs

Power Electronics and Commutation

Each switch position must carry its branch current when conducting and block a topology-dependent voltage when open. Device selection consequently depends on current rating, safe operating area, blocking margin, on-state resistance, switching energy, gate charge and thermal limits. Losses, and hence efficiency, depend on architecture and operating point [21], [53]. For a given silicon device technology, on-state resistance rises with rated blocking voltage [54], which links the voltage class of a switch to its loss. Besides gate drivers, isolated supplies and communication, the practical burden includes protection, busbars, insulation distances, cooling and packaging. Switch count is therefore a useful but incomplete indicator of cost and complexity [18], [19].

An abstract switch configuration may open the load-current path, short a cell or connect unequal voltages [51]. A valid supervisory command must be translated into a timed gate sequence with interlocks, dead time and a path for inductive current. Safe commutation is circuit-specific [55].

Reliability, Safety and Information

Added switches introduce open-circuit, short-circuit, gate-control and state-reporting failures. Degraded-operation claims must therefore specify the assumed failure, diagnostic coverage, isolatable region and retained service. Full vehicle qualification also requires electrical, thermal and functional-safety analysis under applicable standards [56], [57], [58].

Selective control also requires information at the resolution of the controlled unit. Measurement, state and health estimation, synchronisation, communication and diagnostics must scale with granularity [59]. Beyond estimation uncertainty, delayed messages and missing measurements can change the ordering of candidate units or conceal an approaching constraint, so fine actuation alone does not provide equally fine usable control authority.

2.6 Electric-Vehicle Application Context

The value of reconfiguration also depends on the vehicle in which the pack operates and on how that vehicle is used and financed.

Pack Voltage and Series Count

For a given cell, nominal pack voltage is set by the number of series-connected units. Across the vehicles mapped in Paper A, nominal voltages are about 48 V in mild hybrids, 300 to 400 V in mainstream battery-electric cars, and 500 to 750 V in high-voltage passenger platforms and electric trucks [60]. Newer passenger-car platforms are moving towards 800-V-class architectures, mainly to enable faster charging [61]. A longer series string offers more opportunities for an extreme unit to limit the pack, and, for a given group size, it also needs more switched groups.

Use Intensity, Duty and Thermal Environment

Swedish statistics report average annual distances of 11,410 km for passenger cars and 61,600 km for taxis [62], and specific energy consumption of around 0.2 kWh/km is typical of current electric cars [63]. Because calendar ageing accumulates with elapsed time whether or not the vehicle is driven, while cycle ageing accumulates with throughput, use intensity shifts the balance between the two.

Short-time-scale duty is commonly described by standardised speed traces such as those of the Worldwide harmonized Light vehicles Test Procedure (WLTP) [64], and a longitudinal vehicle model converts such a trace into a battery-power request [65]. Thermal management typically keeps the maximum cell temperature below about 50 °C and limits cell-to-cell temperature differences to about 5 °C [66]. Because ageing is temperature-sensitive, even this residual spread can make cell ageing diverge.

Battery Life-Cycle Economics

Recent analysis estimates the service life of battery-electric cars in Great Britain at about 18 years [67]. When a traction pack reaches its first-life end-of-life criterion before the vehicle is retired, the owner faces a replacement cost or reduced service, and extending first life can defer that replacement.

Replacement cost depends on the pack price at that time. The BloombergNEF average was USD 115/kWh in 2024 [68] and USD 108/kWh in 2025 [39].

A retired traction battery can retain economic value. Reported market values of second-life electric-vehicle batteries range from 20% to 80% of the cost of new batteries [69], and the end of second life is generally taken as about 50 to 60% SOH [70]. Second-life deployment typically involves disassembling, testing and reassembling retired packs, for example at module level [4]. The remaining health of a pack at retirement, and how evenly it is distributed among its cells and modules, therefore carries economic value beyond first life.

Chapter 3

Methodological Background

The appended papers answer the three research questions with different outputs but draw on one set of models and analysis methods. Stated in one notation, the toolkit also shows how the output of Paper A becomes the input of Paper B.

3.1 Decision Levels and the Model Chain

System value is assessed over cell and pack life as lifetime extension and net present cost (NPC). Architecture is a largely irreversible design commitment, assessed through granularity, device requirements, loss, cost and the energy still available after faults. Online control takes the installed architecture and estimated state as given and is assessed through feasibility, objective value, solver time and closed-loop behaviour. Model fidelity is chosen for the intended use [71], [72]. The lifetime studies resolve degradation over years but not second-scale switching, whereas the control study resolves voltage, SOC and temperature over seconds but holds capacity and health fixed. The two lifetime studies share the ageing, population and economic methods, and only Paper C uses predictive control (Table 3.1).

3.2 Action Sets: From Fixed to Restricted Flexibility

An effective electrochemical unit is the smallest storage element represented individually, that is, a cell or a permanently parallel-connected group described by a common state. All three papers consider N effective units in series. Each independently controllable element (every unit in Papers A and C, every group

Table 3.1: Methods used in the appended papers. •: used; ○: used in simplified or inherited form.

Method	A	B	C
Action-set abstraction	○	•	•
Equivalent-circuit and thermal models	○		•
Semi-empirical ageing models	•	•	
Populations and lifetime metrics	•	•	
Monte Carlo and Latin hypercube	•	•	○
NPC, device, loss and availability	○	•	
Mixed-integer predictive control			•
Same-state and closed-loop protocols			•

of units in Paper B) has a series switch and a complementary bypass switch, so it is either engaged or bypassed [A], [B], [C]. With $S_i = 1$ denoting engagement of unit i, the flexibility compared in the thesis is described by four sets of admissible engagement vectors $S \in \{0,1\}^N$. The fixed architecture admits only the all-engaged vector, $\mathcal{A}_{\text{fix}} = \{\mathbf{1}_N\}$. Ideal fine-grained flexibility admits $\mathcal{A}_{\text{ideal}} = \{0,1\}^N$ and omits implementation burdens. Physically grouped flexibility wires k units in hard series behind each bypass path. This group size parameterises switching granularity and divides the string into a partition of $N_{\text{g}}(k) = \lceil N/k \rceil$ groups $\mathcal{G}_j$ of sizes k_j, the last being smaller when k does not divide N [B]. Here $\lceil x \rceil$ is the smallest integer greater than or equal to x, so that $N = 100$ and $k = 7$ give 15 groups. Members of a group share one engagement state, so the installed set $\mathcal{A}_{\text{grp}}(k)$ contains $2^{N_{\text{g}}(k)}$ patterns. For the $N = 100$ string of Paper B, this falls from $2^{100} \approx 1.3 \times 10^{30}$ at $k = 1$ to $2^{25} \approx 3.4 \times 10^7$ at $k = 4$. Finally, search-restricted flexibility leaves the hardware unchanged but admits only a subset $\mathcal{A}_{\text{restricted}}$ of its patterns to the online optimiser. With ranking-based feasible-set restriction (RFSR), Paper C admits only ranked prefixes of an ordering π of the units, $S_{\pi(1)} \geq \cdots \geq S_{\pi(N)}$, which leaves $N + 1$ patterns [C].

By construction, for any grouping and any ordering applied to the installed groups,

$$\mathcal{A}_{\text{fix}} \subseteq \mathcal{A}_{\text{restricted}} \subseteq \mathcal{A}_{\text{grp}}(k) \subseteq \mathcal{A}_{\text{ideal}}. \tag{3.1}$$

Equation (3.1) is the set-level form of the progression from potential to installed to usable flexibility. It compares sets of admissible actions only. The papers

measure the value of those actions on different scales. The restrictions also differ in reversibility, since grouping is fixed at manufacture, whereas a search restriction is recomputed at every decision instant.

3.3 Cell and Pack Models

The three papers combine four model classes, each with one principal limitation. Paper A combines an equivalent-circuit model of each cell with semi-empirical ageing models. The equivalent-circuit model represents OCV, ohmic drop and polarisation with one RC branch, and its parameters and order are conditional on data and intended use. Paper A bases the parameters on published cell data [34], [73], [74] and uses published ageing models [33], [40], [41], parameterised from experiments, without re-identification [A]. These ageing models describe capacity loss and resistance growth over years and are valid only within the fitted cell design and stress window.

Paper B takes the per-cell lifetimes of Paper A's string simulations as its central lifetime input and, in a sensitivity case, ages the units with the same ageing models at the cycling rate of each scenario's vehicle use [B]. The models sum calendar and cycle contributions to capacity loss and resistance growth, as power laws of elapsed time and of equivalent full cycles or charge throughput [33], [40], [41]. Each factor depends on one or more of temperature, SOC, current rate, cycling depth and throughput, so a unit's ageing depends on how it is used. Their capacity-loss models are concave and cannot represent a so-called knee, a late-life transition to rapid degradation [75], so the central lifetime results of Papers A and B assume knee-free ageing up to the end-of-life threshold.

Paper C uses a control-oriented electrothermal model, which combines an equivalent-circuit model of the same structure with a lumped thermal model. The thermal model represents heat generation, rejection and temperature limits without spatial gradients within a cell or module. The calibration data of the model are archived with the paper [C], [O].

Papers A and C also share a switch-dependent pack model (Figure 1.1). Since an engaged cell carries the pack current, a bypassed cell carries none and one switch per unit conducts in either state, the cell currents and the pack

voltage are

$$i_i = S_i\, i_{\text{pack}}, \qquad v_{\text{pack}} = \sum_{i=1}^{N} S_i\, v_i - N\, r_{\text{sw}}\, i_{\text{pack}}, \tag{3.2}$$

where v_i is the terminal voltage of cell i and r_{sw} the switch on-state resistance [C]. The products of binary and continuous variables make the pack model hybrid and lead to optimisation problems with mixed-integer structure. The model maps the engagement vector to string current and voltage but does not model the switching transients (commutation).

3.4 Heterogeneous Populations and Lifetime Metrics

In Papers A and B, heterogeneity is modelled as beginning-of-life variation in capacity and resistance and as spatial temperature variation. Paper A samples units independently, and Paper B reuses its simulated strings, using the same coefficients of variation and two manufacturing cases for each of LFP and NMC, derived from published measurements on new cells [6], [8], [43]. For LFP, they use mean temperatures of 25, 35 and 45 °C with spatial standard deviations up to 0.833 °C, a full spread of about 5 K. Correlations between cells, for example between neighbouring cells, within a production batch or from a shared cause, are therefore not considered, apart from a sensitivity case of Paper B with correlated temperatures within modules. The central first-life end-of-life criterion of Papers A and B is 80% of nominal capacity. Paper B's use-linked sensitivity ensemble also ends a unit's life at doubled resistance, and Paper C simulates no ageing.

Let L_i be the service delivered by unit i up to its end of life, in equivalent full cycles (Paper A) or years (Paper B). A fixed string ends its life with its first unit, i.e. $L_{\text{fix}} = \min_i L_i$, the first order statistic of the population [76]. If all L_i follow the same distribution, the distribution of L_{fix} shifts towards shorter lives as N grows. Under idealised reconfiguration control, units reach end of life together, but each hard-series group can contribute only until its weakest member is exhausted. For groups of k units in series, Paper B writes

$$L_{\text{ideal}}(k) = \frac{1}{N} \sum_{j=1}^{N_{\text{g}}(k)} k_j \min_{i \in \mathcal{G}_j} L_i, \qquad \chi(k) = \frac{L_{\text{ideal}}(k) - L_{\text{fix}}}{L_{\text{fix}}}. \tag{3.3}$$

where $\chi(k)$ is the relative lifetime extension of the reconfigurable string over the fixed one. For $k = 1$, $\chi(1) = \left(\frac{1}{N}\sum_i L_i\right)/\min_i L_i - 1$, which has the form of Paper A's lifetime-extension metric, although the two papers still differ in service unit. For $k > 1$, Paper B uses random grouping as the primary case and compares it with matched grouping, which places units of adjacent lifetime rank in the same group, and dispersed grouping, which spreads the ranks across groups.

When the ideal is a bound. In this thesis, bound denotes a relationship that follows from stated sets and objectives. Assume that each unit's service budget L_i does not depend on how the unit is allocated. Under this budget assumption, group j can deliver at most $k_j \min_{i\in\mathcal{G}_j} L_i$ units of unit-service, so no policy within $\mathcal{A}_{\mathrm{grp}}(k)$ exceeds $L_{\mathrm{ideal}}(k)$, and Eq. (3.3) is an upper bound. Voltage, power or minimum-active-unit constraints can only reduce the achievable lifetime further. The budget assumption holds only approximately, because the ageing models depend on loading and a bypassed unit keeps ageing with time. Without it, L_{ideal} is an idealised benchmark.

From opportunity to economic lifetime. Both economic models assume idealised reconfiguration control and transfer the lifetime extension to an assumed economic life. Let $Y_{\mathrm{CBP}} = 10$ years be the economic reference life of the conventional battery pack (CBP), fixed independently of the simulated technical lifetime, and Y_{RBP} that of the reconfigurable battery pack (RBP). Paper A samples the relative extension uniformly on $\bar{\chi}_{\mathrm{med}} \pm s_{\chi,\mathrm{med}}$, the median scenario mean and standard deviation at a nominal pack voltage of 800 V, whereas Paper B draws $\chi(k)$ for each group size from the simulated strings [A], [B], i.e. according to

$$Y_{\mathrm{RBP}}(k) = Y_{\mathrm{CBP}}\big[1 + \chi(k)\big]. \tag{3.4}$$

Applying the extension to the replacement interval is itself an economic modelling assumption. This assumption values operation at reduced voltage and energy as if that operation deferred the replacement [B].

3.5 Scenario Design and Uncertainty Propagation

The lifetime studies separate a technical stage from an economic stage. In the technical stage, Monte Carlo simulation propagates sampled cell populations through the ageing models [77], [78]. In the economic stage, Latin-hypercube sampling (LHS) stratifies each input's marginal distribution to cover a multidimensional range with fewer samples [79], [80]. Paper A evaluates 240 technical scenarios with 1,000 realisations each and 100,000 economic samples. On Paper A's simulated strings, Paper B screens every group size whose bypass path fits the highest surveyed voltage class, with paired economic samples. Paper C uses paired initial-condition realisations and sweeps over heterogeneity, demand, pack size and horizon [A], [B], [C].

Alternatives are compared on common draws so that their difference is not confounded by sampling [78]. The CBP and the RBP share simulated cells in Paper A, all candidate k share one unit-lifetime vector in Paper B, and both controllers start from the same state in Paper C, with paired differences reported with bootstrap confidence intervals. Pairing removes avoidable between-case variation but not bias shared by both alternatives. Because the economic input ranges are prescribed for design exploration, the fraction of samples meeting a condition, such as a cost saving, is a coverage fraction of the scenario space and cannot be read as a frequentist, Bayesian or market probability. Papers A and B summarise input-output associations with Spearman rank coefficients ρ, which screen monotonic association but, unlike variance-based indices, do not apportion output variance [81], [82].

3.6 Techno-Economic and Architecture Evaluation

Both lifetime studies (Papers A and B) compare the CBP and the RBP over vehicle life Y_{EV} through their net present cost, i.e. the initial cost $C_{0,\xi}$, plus the energy, operation-and-maintenance and replacement costs of each year y discounted at rate r, minus the discounted residual value $C^{\mathrm{disc}}_{\mathrm{res},\xi}$ [A], [B],

$$\mathrm{NPC}_{\xi} = C_{0,\xi} + \sum_{y} \frac{C_{\mathrm{en},y,\xi} + C_{\mathrm{O\&M},y,\xi} + C_{\mathrm{repl},y,\xi}}{(1+r)^{y}} - C^{\mathrm{disc}}_{\mathrm{res},\xi}, \tag{3.5}$$

for $\xi \in \{\mathrm{CBP}, \mathrm{RBP}\}$. The benefit of reconfiguration is

$$\Delta\mathrm{NPC} = \mathrm{NPC}_{\mathrm{CBP}} - \mathrm{NPC}_{\mathrm{RBP}}, \tag{3.6}$$

which is positive when the RBP is cheaper over the vehicle life. Table 3.2 lists where the two implementations differ. In their central cases, both papers assume a maintenance rate of the RBP that is half that of the CBP.

Table 3.2: Economic model choices in Papers A and B.

Element	Paper A	Paper B
Switching hardware	$C_{0,\mathrm{RBP}} = (1+\nu)C_{0,\mathrm{CBP}}$, $\nu \in [1\%, 15\%]$	Bottom-up, by device voltage class, with parallel devices for the peak string current and a fuse and overhead per group
Pack price	Replacement price declining according to a fit to 2018 to 2024 data	Constant 2025 price for each chemistry
Added loss	$\delta_{\mathrm{loss}} \in [0.5\%, 3.5\%]$	Conduction loss of the switch path while driving and charging, plus auxiliary power
Residual value	Remaining SOH relative to a final end of life (50 to 60% SOH for the CBP, 40 to 50% for the RBP), times a resale coefficient	Remaining fraction of battery life times acquisition cost

Paper B links granularity to hardware. Group j, with k_j units, requires a blocking voltage of $\lambda_{\mathrm{V}}\, k_j\, v_{\mathrm{cell}}^{\max}$, with voltage-margin factor $\lambda_{\mathrm{V}} = 1.5$ in the central screen and maximum cell voltage $v_{\mathrm{cell}}^{\max}$. The requirement is met by the smallest surveyed automotive metal-oxide-semiconductor field-effect transistor (MOSFET) class in $\{40, \ldots, 200\}$ V, and device price and on-state resistance are fitted as power laws of class voltage [B], the latter consistent with silicon device scaling [54]. Each switch position has enough parallel devices to carry the peak string current, and each group has a fuse. Paper B also computes the expected fraction of string energy still available after faults, $A(k)$, from independent failure probabilities of the units and of the switch paths, where a share of switch-path failures takes the whole string out of service [B]. The metric excludes fault propagation and common-cause events.

Lifetime, cost, loss and availability have no common unit, and no exchange rate between them is assumed [83]. Paper B therefore reports four results. The least costly candidate is the k with the highest median ΔNPC. The near-optimal set contains all k whose median paired disadvantage against

that candidate is at most 10% of its absolute median benefit. The break-even O&M factor is the ratio of the RBP's to the CBP's maintenance rate at which a candidate's median benefit is zero. The fourth result is the Pareto set of median benefit and the energy still available after faults.

3.7 Mixed-Integer Predictive Control

Model predictive control (MPC) solves a finite-horizon optimal-control problem from the current state at each sampling instant t, applies the first input and then repeats [84]. With the binary engagement decisions of Eq. (3.2), MPC becomes a mixed-integer MPC (MI-MPC) [85], [86]. In Paper C, the inputs over a horizon of N_p steps are the engagement vector, the pack current and a curtailment slack expressing unmet power as an equivalent current. The objective weights penalties on engaging low-SOH cells, on normalised SOC spread and on curtailment, subject to the electrothermal dynamics, bounds on current, SOC, temperature and voltages, and a terminal SOC-spread bound. Capacity and SOH are held constant over the horizon [C]. After exact reformulation of the binary-continuous products and convex approximation of the remaining nonlinearities, each step solves a mixed-integer convex programme (MICP).

Branch-and-bound solves an MICP over a tree of convex relaxations. At any time it holds an incumbent, the best feasible solution so far, and a lower bound. A solution is certified optimal when the relative gap between the incumbent and the lower bound falls below a set tolerance [87]. Incumbents often appear long before certification, which is generally the dominant computational effort [24], [88], and solver time can vary strongly between similar steps [C], so average solver time is insufficient evidence for online use.

Paper C first screens out engagement vectors that engage too few cells to meet the minimum pack voltage or the requested power, a floor $m_{\min}$ of 13 of the 20 cells in the nominal pack [C]. Most of the vectors that remain per stage differ only in which similar cells are engaged. RFSR therefore scores each cell by a one-step surrogate of its contribution to the three objective terms, orders the cells by score to obtain, at every instant t, the ordering π, and admits only ranked prefixes of π. The optimiser then chooses how many cells to engage but not which ones, and the count falls to $N - m_{\min} + 1 = 8$, at the cost of $N - 1$ linear inequalities per stage but no new binary variables.

Let $J^{\star}_{\text{full}}(t)$ and $J^{\star}_{\text{pref}}(t)$ be the optimal objective values of the full and the restricted (prefix) problem at instant t. Because the restricted feasible set is contained in the full one, whenever the restricted problem is feasible

$$J^{\star}_{\text{full}}(t) \leq J^{\star}_{\text{pref}}(t), \tag{3.7}$$

with equality if some optimal solution of the full problem is a ranked prefix [C]. This bound follows from set inclusion alone. A certificate for the restricted problem therefore certifies optimality only over the restricted set. The all-engaged vector is a prefix under every ordering, which provides a fallback candidate but not recursive feasibility. No general bound on the difference between the two optima is claimed. Paper C measures the difference empirically.

3.8 Evaluation Protocols and Evidence

To judge computational reliability, Paper C reports the fraction of control steps certified optimal within the 1-s operational limit, together with high percentiles and the maximum of the solver time. Closed-loop objective values of two controllers are not directly comparable because the controllers visit different states. The cost of RFSR is therefore measured by solving both problems from the same state, with a 100-s limit for the full problem, and computing the same-state restriction gap $100\,(J^{\star}_{\text{pref}} - J^{\star}_{\text{full}})/J^{\star}_{\text{full}}$ on steps where both are certified and uncurtailed. Because certificates hold only to the optimality-gap tolerance, the gap can be marginally negative. Closed-loop behaviour is reported through tracking, curtailment, SOC dispersion, the fraction of engaged cells and switching activity [C].

Validation assesses whether a model represents the real system adequately for its intended use [71], [72], [89]. The appended papers add no new experimental validation, so all thesis-level results are simulation-based, and each type of evidence supports only the claims listed as supported in Table 3.3.

Table 3.3: Evidence types and the claims each can support once its assumptions are stated.

Evidence	Papers	Supported claim	Not established by that evidence alone
Idealised benchmark	A, B	Potential within the model, and an upper bound under the budget assumption	Controller-realised lifetime or implementation efficiency
Scenario-based screen	A, B	Candidate designs and trade-offs under prescribed inputs	Field probabilities or a production-ready design
Same-state reference solve	C	Conditional restriction cost on matched tested states	Equivalence over all states or trajectories
Closed-loop simulation	C	Behaviour and constraint satisfaction in tested cases	Embedded execution, hardware safety or field lifetime
Sensitivity or robustness study	A, B, C	Dependence of a conclusion on varied assumptions	Validity outside the tested ranges or model structures

Chapter 4

System-Level Value of Dynamic Reconfiguration

Before any switching hardware is designed, reconfiguration must be shown to be worth its cost. RQ1 asks whether the flexibility introduced by reconfiguration creates sufficient system-level value to justify further architectural and control development.

4.1 From Cell Heterogeneity to System-Level Value

Cell-to-cell heterogeneity matters because a fixed pack turns a distribution of local conditions into a system-level limit. Whichever cell first reaches a constraint governs the shared current path, and the other cells can hold stranded capability.

Dynamic reconfiguration can weaken that coupling by changing which units participate and how service is allocated among them. The immediate technical benefit may appear as improved balancing, reduced curtailment, fault isolation or more uniform utilisation. None of these quantities alone, however, establishes system-level value. Better SOC balance is useful only if it improves an outcome that matters over the service life. Additional operating time matters only if it outweighs the cost and loss of the switching system, and fault tolerance is useful only if the resulting degraded mode still meets the application requirement.

RQ1 therefore requires a chain of evidence beyond a component-level performance comparison. Heterogeneity must first be connected to pack-level under-utilisation and degradation. Reconfiguration must then be shown to recover part of that stranded capability over relevant operating and ageing conditions. Finally, the recovered service must be translated into economic

outcomes under explicit assumptions about pack replacement, vehicle life, hardware cost and residual value.

4.2 Existing Evidence for Reconfiguration Benefits

Previous work establishes several mechanisms by which reconfiguration can improve battery operation. Letting selected cells rest by bypassing them can spread the load more evenly among cells [50]. Model-based balancing and reconfiguration have been used to mitigate weak-cell bottlenecks [48] and to extend simulated pack lifetime [13]. Structural analyses show that the switch states of a reconfigurable battery can be exploited to detect and localise faults, which can be used for bypassing faulty cells [51]. Prototype and demonstrator work further shows that the relevant functions can be implemented beyond purely conceptual circuit studies [52], [90].

These results establish technical possibility, but they do not by themselves determine the magnitude or robustness of the lifetime opportunity. Studies often evaluate one architecture, chemistry, duty cycle or degradation model, or optimise an immediate control objective such as balancing or power delivery. Degradation-conscious control studies demonstrate that ageing can be placed inside operational optimisation [91], while techno-economic comparisons assess cost and efficiency for particular architectures and applications [20], [92]. None of these studies reports a quantified lifetime gain together with an economic metric. The study in [13] quantifies lifetime and names cost benefits only qualitatively, those in [20], [92] quantify cost without ageing, and those in [48], [91] report energy or capacity-loss benefits over a single cycle or profile.

4.3 The Unresolved Comparison Problem

What is missing is a comparison that shows when the reported benefits of reconfiguration remain large enough to matter, across interacting sources of heterogeneity and the system conditions that decide whether recovered lifetime has economic value. Manufacturing variation changes the initial distribution of capacities and resistances, and thermal non-uniformity changes cell ageing trajectories. Chemistry changes both electrical behaviour and ageing sensitivity. Pack voltage and series population change the number of opportunities for an extreme cell to bind, and use intensity changes both degradation and the time

over which an upfront hardware premium can be recovered.

These factors cannot be analysed through a sequence of isolated one-at-a-time comparisons. Their interactions can reinforce or offset one another, and the relevant output is a distribution over heterogeneous pack populations, which one deterministic trajectory cannot represent. A sound comparison therefore requires common service requirements, shared boundary conditions, explicit uncertainty propagation and economic accounting that does not treat simulated scenario frequencies as market probabilities.

4.4 Thesis Response to RQ1

Paper A provides the principal response to RQ1 through a statistically grounded, battery-chemistry-agnostic system-level assessment that compares the CBP with the RBP [A]. It combines virtual heterogeneous cell populations with published cell and ageing models. Within a structured scenario campaign, it evaluates the effects of chemistry, manufacturing variation, thermal environment, use intensity and pack design, and it connects the lifetime outcomes to net present cost and residual value.

Paper A thereby establishes a conditional map of reconfiguration value. It identifies which physical and economic mechanisms govern that value and where the opportunity becomes large.

Chapter 5

Reconfiguration Granularity and Architecture Co-Design

The value that Paper A establishes under idealised cell-level reconfiguration control motivates physical flexibility but does not specify an architecture. RQ2 therefore asks how much of the ideal flexibility should be implemented in hardware.

5.1 Granularity as an Architectural Design Variable

Two consequences of the group size k frame RQ2. Inside a group, units are permanently coupled. When one member reaches a limit, the group reproduces the weakest-member mechanism of a fixed string, so increasing k coarsens the resolution at which heterogeneity can be managed. Because grouping is fixed at manufacture, it bounds the action space of every future controller and every degraded operating mode.

5.2 Implementation Trade-Offs

Fine granularity preserves the largest set of controllable configurations and can address heterogeneity down to the level of individual cells. It can avoid bypassing a healthy cell merely because another cell in the same group is limiting, and it creates more options for utilisation balancing and fault isolation. The benefit is nevertheless subject to diminishing system value, because neighbouring cells may be sufficiently similar that independent switching changes few decisions, and additional configurations are useful only if sensing, estimation and control can distinguish and exploit them.

Coarser granularity reduces path count and the associated drivers, supplies, measurements and control variables, but it raises the voltage that the switches of each group must block and can move the design into a different semiconductor class. Conduction loss, switching loss, package count, thermal integration and failure modes therefore do not scale through one device-count factor. Prototype-based comparisons also show that the efficiency ordering between reconfigurable and fixed conversion architectures changes with operating point [21], so the burden cannot be represented by a single architecture-independent percentage.

Granularity also changes degraded operation. A fine architecture may isolate a small local fault and retain most of the pack voltage, whereas a coarse architecture may have to remove an entire group. Conversely, every added switching path creates components and interconnections that can themselves fail. A complete architecture choice must therefore consider both the capability retained after a cell failure and the reliability burden introduced by the switching system.

5.3 Existing Approaches

The literature addresses the ingredients of this trade-off in largely separate strands. Surveys classify reconfigurable topologies, switching functions and implementation constraints [17], [18], [19]. They establish which series, parallel, bypass and conversion functions different circuits can provide, but usually treat granularity as a fixed property of the selected topology, leaving it unscreened as a design variable. One of these surveys explicitly identified switching granularity as underexplored [18].

Lifetime studies show that reconfiguration can reduce the pack-level losses created by heterogeneous cells, but commonly assume ideal or effectively cell-level switching [13], [A]. That assumption estimates the opportunity but does not quantify how much is lost when several units share one uncontrollable series path. Power-electronic and control studies quantify efficiency, operating regions or power allocation for an architecture fixed in advance [21], [23], [93], while demonstrator studies establish feasibility at a selected design point without comparing a family of granularities [52]. A few studies have treated the partition as a design variable. One screened module size for a single e-bike [20]. For a cascaded H-bridge traction inverter, four modules per phase offered the best compromise between efficiency and cost, although the preferred design

depended on the switch configuration and the cost assumptions [94]. Similarly, greater modularisation can enable lower-voltage devices, and a multi-objective assessment favoured about ten modules [95]. None of these studies models battery ageing. Closest to RQ2, a study with a generic capacity fade and assumed cell-to-cell spreads showed that a lifetime-cost-optimal module size exists [96]. Its cost per module, however, varies smoothly with module size and resolves neither the semiconductors and their voltage classes nor the conduction loss.

What is missing is a joint comparison. The electrochemical cost of grouping is the capability stranded behind the weakest member of each hard-series group. It must be evaluated against path count, semiconductor blocking-voltage class, device price and on-resistance, aggregate electrical loss, net present cost and the energy still available after faults. Cell assignment must also be made explicit, because grouping cells with similar expected trajectories can partly compensate for coarse hardware, whereas random grouping exposes the full within-group dispersion.

5.4 Thesis Response to RQ2

Paper B treats k as an explicit architecture-screening variable and evaluates the coupled effects that the existing literature usually separates. It extends the idealised system-value assessment of Paper A to grouped switching. On the electrochemical side, it combines the per-cell lifetimes of Paper A's string simulations with grouping-dependent weakest-member statistics and alternative cell assignment policies. On the hardware side, it uses a survey of 95 automotive MOSFETs, switch hardware sized for the peak string current with a fuse per group, and conduction loss while driving and charging. A net-present-cost model and a metric of the energy still available after faults, including switch-path failures, complete the screen.

As a result, Paper B establishes the switching-granularity screen (SGS). Under the investigated scenarios, this scenario-based screen identifies the least costly group size, the near-optimal group sizes, the maintenance saving at which reconfiguration breaks even, and the Pareto set of benefit and energy after faults. The screen determines how much of the potential flexibility established by Paper A should be made physically available when electrochemical and implementation effects are charged together, and whether any of it pays.

Chapter 6

Computationally Reliable Real-Time Control

An installed architecture may still offer more discrete configurations than an online controller can examine within one control period, so physical availability and computational usability need not coincide. RQ3 asks how the installed flexibility can be exploited within a real-time deadline.

6.1 From Installed Flexibility to Online Decisions

A reconfigurable pack requires repeated decisions about which cells or groups of cells are connected in the pack's power path and how the power should be shared among them. These decisions are state-dependent. A configuration that is favourable at one instant may become unsuitable as state of charge, temperature, resistance, predicted voltage or the requested pack power changes. A fixed scheduling rule can be inexpensive, but it cannot generally account for the future effect of present switching decisions on cell constraints and balancing objectives.

Mixed-integer MPC (MI-MPC) suits this combination of continuous dynamics and discrete topology, because hybrid dynamics, logic, physical limits and performance objectives can be represented within one receding-horizon optimisation problem [85], [86]. The same formulation, however, creates a hard real-time condition, since a useful decision must be returned before every deadline. Computational reliability is therefore judged by deadline-oriented measures, such as high-quantile solver times, certification and fallback use. Average solver time can hide the rare late solutions that miss the deadline.

6.2 Combinatorial Structure and Computational Reliability

The combinatorial burden arises from the binary engagement decisions. Even when a minimum number of engaged cells is required, the number of candidate engagement patterns per prediction stage grows combinatorially with the number of cells, and the count compounds over the horizon.

Three different sources of redundancy must also be separated. An infeasible configuration violates an electrical, safety or operational constraint and should be removed without loss. A physically duplicate switch description produces the same battery operating state as another description and can be eliminated through modelling or abstraction. Configurations of the third class may be feasible and physically distinct but near-equivalent in predicted consequence because the cells involved have similar state of charge, temperature, resistance and ageing condition. Feasibility pruning addresses the first class and operating-state abstraction the second. Neither removes the third.

6.3 Existing Approaches

Existing battery-control approaches handle the combinatorial engagement search in several ways. Balancing acts within a fixed connection structure and therefore never faces a pack-level topology search [15], [16]. The discrete choices arise only once reconfiguration changes which units carry the main current.

One response avoids a large binary problem through predictive-control formulations that operate on architectures whose main online decision is continuous power allocation [97], [98]. Mixed-integer control has also been demonstrated in simulation on a small bypass-switched pack under a solver-time cap, with the practical compromise that global optimality may not be certified before the deadline [22]. Thermal load-sharing objectives [99] and comparisons between predictive and rule-based operation [23] likewise show the performance opportunity and computational cost of online optimisation.

A second response avoids the original mixed-integer formulation through continuous control allocation, barrier-function methods or learned policies [100], [101], [102], [103]. These methods can be computationally attractive, but generally do not provide a per-step optimality certificate for the original

mixed-integer problem.

A third response retains that problem and improves its representation or solution. Unified control-oriented models describe switch-dependent interconnections compactly [55], [104], while warm starts and structure-exploiting branch-and-bound reuse information across successive MPC problems [24], [88]. Integer programming also handles symmetry. When variables are interchangeable, branch-and-bound wastes effort on equivalent solutions [105], which symmetry-breaking constraints such as orbitopes [106] and symmetry-exploiting branching rules such as orbital branching [107] remove without loss of optimality. These methods assume exact symmetry, whereas cells with similar states are only near-symmetric.

6.4 Thesis Response to RQ3

Paper C addresses the third class, the feasible, physically distinct but near-equivalent configurations, with ranking-based feasible-set restriction (RFSR), implemented as the RFSR-MI-MPC controller [C]. At each control step, the cells are ordered by a one-step score of their contribution to the objective, and the optimiser admits only prefixes of that ordering. The battery model, constraints and objective remain unchanged. What changes is the discrete set presented to the online solver. If all cells were identical, the prefix restriction would be an exact symmetry-breaking constraint. For near-identical cells, the restriction is an approximate one that also removes distinct solutions.

RFSR thereby reduces combinatorial search while retaining fine physical granularity. Because RFSR is recomputed at every control step, it removes no hardware capability permanently. The cost of RFSR is a possible loss of optimality at each step, which Paper C quantifies as the same-state restriction gap.

Chapter 7

Summary of Included Papers

This chapter summarises each appended paper, its key result and the research question it addresses.

7.1 Paper A

Albert Škegro, Torsten Wik, Bo Bijlenga, Alexander Bessman, Changfu Zou
System-Level Assessment of Dynamic Reconfiguration for Lifetime and Cost Outcomes in Electric Vehicle Battery Packs
Published in *Nature Communications*,
vol. 17, no. 1, art. 5980, Jul. 2026.
© The Author(s) 2026.
DOI: 10.1038/s41467-026-74951-8
Open access under CC BY 4.0 (`http://creativecommons.org/licenses/by/4.0/`).

Paper A asks when the ability to change pack topology creates substantial lifetime and economic value beyond improving an intermediate balancing metric. It compares the CBP with the RBP in a scenario campaign and connects the simulated lifetime outcomes to a net-present-cost comparison that includes replacement cost and residual value. Across groups of simulated scenarios, median ideal lifetime extensions reach about 10% for LFP and 18% for NMC. On the fitted voltage trend (Figure 7.1), the extensions exceed 20% for high-voltage NMC packs such as those of electric trucks and long-range passenger cars. In the baseline case of an 80-kWh LFP pack, the RBP saves 652 EUR over the vehicle life. Within the thesis, Paper A provides the principal evidence for RQ1.

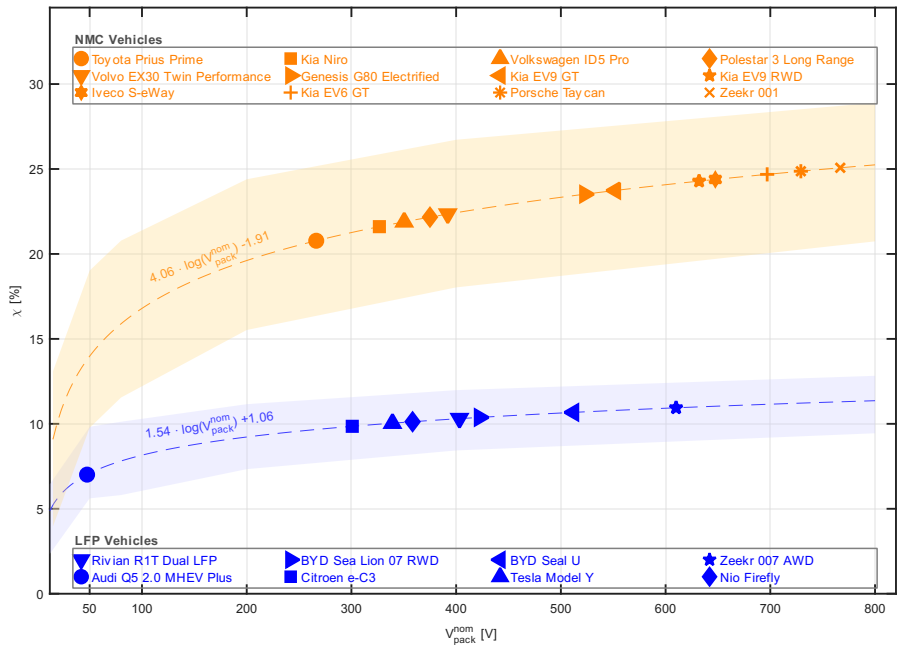

Figure 7.1: Estimated mean ideal lifetime extension $\bar{\chi}$ for representative electric vehicle models, by cathode chemistry and nominal pack voltage (Paper A, Figure 3).

7.2 Paper B

> **Albert Škegro**, Torbjörn Thiringer, Torsten Wik, Changfu Zou
> When Does a Reconfigurable Electric-Vehicle Battery Pay? Switching Granularity, Priced Switch Hardware, and Maintenance
> Manuscript to be submitted to a scientific journal.

Paper B asks how much of the ideal cell-level flexibility in Paper A should be implemented physically, and whether any of it pays. It proposes the switching-granularity screen (SGS), which weighs the lifetime extension that each group size retains against switch hardware sized for the string current, a fuse and overhead per group, and conduction loss while driving and charging, and compares the discounted lifetime cost with that of a conventional pack. Under the modelled conditions, cell-level switching does not pay. Its switches

cost a median of 52% (LFP) and 31% (NMC) of the conventional pack, and cell-level switching raises the median lifetime cost by 4,146 and 2,573 EUR even at a halved maintenance rate (Figure 7.2). At equal maintenance rates, no granularity pays in the central screen. With halved rates, the least costly groups lie at the top of the 100-V device class, $k = 18$ for LFP (274 EUR) and $k = 15$ for NMC (847 EUR), and they break even only if the maintenance rate of the reconfigurable pack is at least 28% (LFP) or 9% (NMC) lower. Across the sensitivity cases, the least costly group is a voltage-class top or the fuse limit in 72 of 81 combinations, and under an independent-fault model, frequent non-bypassable switch-path failures remove the finest groups from the Pareto set of benefit and energy after faults. Within the thesis, Paper B provides the principal evidence for RQ2.

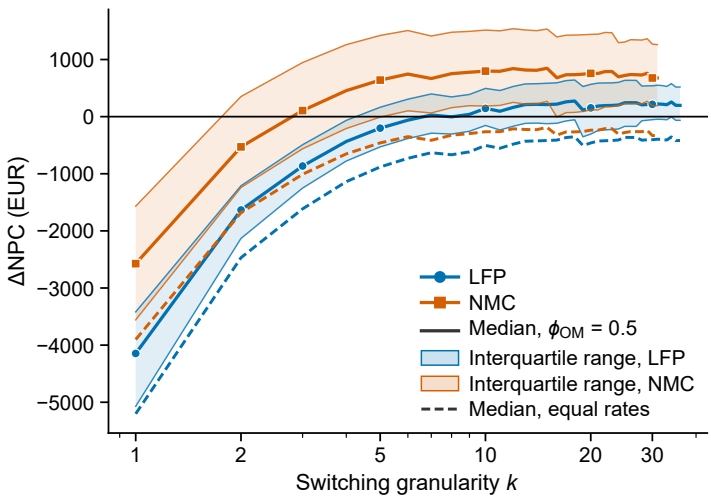

Figure 7.2: Median and interquartile range of the net-present-cost benefit ΔNPC of the reconfigurable pack over the switching granularity k, at a halved and at an equal maintenance rate of the reconfigurable pack (Paper B, Figure 2, left panel).

7.3 Paper C

Albert Škegro, Quan Ouyang, Torsten Wik, Changfu Zou
RFSR-MI-MPC: Ranking-Based Feasible-Set Restriction for Real-Time Control of Reconfigurable Battery Packs
Submitted to *IEEE Transactions on Control Systems Technology*.

Paper C addresses the gap between flexibility installed in hardware and flexibility that can be searched reliably within an online control period. Its RFSR-MI-MPC controller, based on ranking-based feasible-set restriction (RFSR), restricts the admissible configurations to prefixes of a cell ranking recomputed at every control step, which reduces the feasible set presented to the solver from combinatorial to linear size in the cell count per prediction step. For a 20-cell pack following a Worldwide harmonized Light vehicles Test Cycle (WLTC), the RFSR-MI-MPC controller certifies optimality over its admitted set at every step, reduces 95th-percentile solver time by a factor of 6.8 (Figure 7.3) and lowers cell-to-cell state-of-charge spread by a factor of 3.4 without curtailing requested power. On the states at which both problems were certified and no power was curtailed, the mean same-state restriction gap remains below 0.11%. The 151 mostly high-power states at which the full problem was not certified within 100 s are excluded from this comparison. Within the thesis, Paper C provides the principal evidence for RQ3.

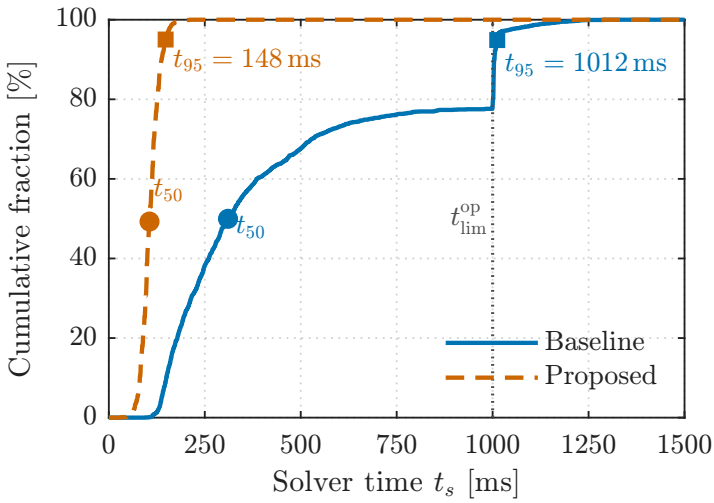

Figure 7.3: Cumulative distribution of the per-step solver time over the nominal WLTC cycle, without (baseline) and with (proposed) the ranking-based feasible-set restriction (Paper C, Figure 2).

Chapter 8

Synthesis and Research Outlook

Chapters 4 to 7 report the results of each study separately. Read together, the studies show relations that none of them shows alone, because each study holds fixed what another varies. This chapter first states these joint findings and places them against prior work. It then draws the implications for pack architects, control developers and techno-economic analysts, sorts the conclusions by how robust they are, and derives research priorities from those that remain open, together with further uses of the switching hardware.

8.1 What the Studies Show Together

The value of reconfiguration is a property of the partition. Paper B evaluates Paper A's cell-level case ($k = 1$) with switches sized for the string current, a fuse and overhead per group, and conduction loss while driving and charging. For a 100-unit string, the switches cost a median of 52% (LFP) and 31% (NMC) of the conventional pack, and the median benefit is $-4{,}146$ EUR for LFP and $-2{,}573$ EUR for NMC [B]. Across Paper B's sensitivity cases, the cell-level median turns positive only for NMC with free switching hardware or with the one-device, lumped-loss hardware of Paper A [B]. A lifetime benefit under idealised cell-level reconfiguration control therefore does not survive switch hardware sized for the string current, and whether reconfiguration pays depends on the chosen partition and an assumed maintenance saving.

Online computation need not constrain physical granularity. Paper B selects group sizes without accounting for online computation [B]. Paper B's least costly candidates, $k = 18$ (LFP) and $k = 15$ (NMC) at $N = 100$, leave only 6 or 7 independently controllable groups, whose 2^6 or 2^7 patterns can

be enumerated online. Paper C restricts the per-stage search to a number of patterns linear in the cell count and certifies every active step for 16 to 24 cells [C]. In Paper B's central screen, that range corresponds to $k = 5$ or 6, where the median benefit is negative for LFP and 207 or 101 EUR below the least costly candidate for NMC. Fine partitions nevertheless keep the most lifetime extension and, when switch-path failures are rare, the most energy under faults [B]. The results therefore suggest that real-time tractability is no reason to coarsen the hardware, and that RFSR matters where cheaper switches or a functional value of reconfiguration justify fine partitions. The combination is untested on grouped packs and embedded hardware.

Cell assignment can substitute for switching hardware. At $k = 10$, matched grouping raises the median ideal extension from 3.43% to 8.40% for LFP and from 5.18% to 13.71% for NMC, recovering about 85% of the opportunity lost relative to $k = 1$. With matched grouping, the least costly NMC candidate pays even at equal maintenance rates [B]. Assignment at assembly is therefore an architectural variable of the same order as switching resolution. Assignment at assembly needs no additional switching hardware, although its production cost was not evaluated. Matched grouping ranks units by their true simulated lifetimes, so it bounds what practical sorting can deliver.

Series count raises both the opportunity and its cost. Paper A finds the largest lifetime gains at high pack voltage. In Paper B's 800-V-class string of 200 units, the ideal cell-level extension rises (9.28% to 10.17% for LFP, 15.12% to 16.96% for NMC), but the number of groups at a given k doubles. Cell-level switching then costs a median of 85% (LFP) and 51% (NMC) of the conventional pack, and the least costly candidates move to coarser groups with medians within 50 EUR of the 400-V ones [B]. The 800-V case holds pack energy fixed, so it credits the lower current of the longer string only through the number of parallel devices.

The economic case rests on assumed advantages of the RBP. At Paper B's least costly candidates, the median extension of 2.52% (LFP) and 4.14% (NMC) corresponds to battery lives of only 10.25 and 10.41 years against a 10-year reference, yet the median benefit is positive at the halved maintenance rate [B]. Removing the assumed advantages of the RBP cumulatively from the Paper A

Table 8.1: Paper A economics with the assumed advantages of the RBP removed in sequence, computed with version 1.1.0 of Paper A's code [108].

Step	Baseline ΔNPC [EUR]	Median, all scenarios [EUR]	Scenarios with a saving
Published assumptions	652	158	61.1%
Equal end-of-life thresholds	318	−69	44.7%
+ resale without switching hardware	124	−241	34.1%
+ equal maintenance rates	−933	−1,006	1.4%

baseline, computed with version 1.1.0 of Paper A's code [108], shows why (Table 8.1). The steps set both end-of-life thresholds to the CBP value of 55%, base the RBP's resale value on the pack cost without the switching premium, and equalise the maintenance rates. The baseline saving then becomes a loss of 933 EUR, with a saving left in only 1.4% of the scenarios. With these three advantages removed, and without switching premium and added loss, the longer life alone is worth 244 EUR at the baseline, of which the added switching losses take 164 EUR. Because each percentage point of the hardware premium ν costs 135 EUR, lifetime extension alone repays the switches only below a premium of 0.6% for the baseline LFP pack and about 2.7% for a 120-kWh NMC pack. Paper A's bottom-up estimate is 9.36% (LFP) and 8.47% (NMC), and Paper B's median surcharges are 3.8% (LFP) and 2.6% (NMC) at its least costly candidates. Paper B shows the same dependence on maintenance. No granularity pays at equal maintenance rates. A positive median benefit requires the RBP's maintenance rate to be below 0.72 (LFP) or 0.91 (NMC) times the conventional rate, and at the least costly candidates the maintenance saving is the largest gain [B].

8.2 Position Relative to Prior Work

Against the common assumptions of prior work, the thesis screens granularity instead of fixing it, maps value over scenarios instead of one architecture, and retains mixed-integer control with certification, though only over a restricted set (Table 8.2). Quantitatively, Paper A's median ideal extensions, from 6.39%

(LFP, low voltage) to 17.95% (NMC, 800 V), bracket the single-case gain of more than 16% reported for cell-level control in [13]. They are, however, medians over scenario ensembles, whereas that gain comes from a single simulated case.

Table 8.2: Common assumptions in prior work and the corresponding thesis results.

Prior work	This thesis
Lifetime benefits shown under ideal, effectively cell-level control [13]	Cell-level switching does not pay once its switches are sized for the string current, and the benefit depends on the partition and an assumed maintenance saving (Papers A and B)
Granularity an attribute of a chosen topology [17], [19], identified as underexplored [18], screened for one e-bike [20] or with a generic cost per module [96]	Granularity screened with priced, current-sized devices, the least costly group sizes mostly at device voltage-class tops or the fuse limit (Paper B)
Techno-economic assessments for one architecture or application [20], [92]	Scenario-wide maps with stated thresholds from two economic models (Papers A and B)
Mixed-integer control under a solver cap without a certification guarantee [22], or continuous allocation that avoids binaries [97]	Mixed-integer formulation retained, with certification over a restricted set with a linear pattern count (Paper C)

8.3 Implications for Practice

For pack architects, the results favour fixing the voltage margin and maximum cell voltage before choosing granularity, and costing the switch hardware bottom-up with parallel devices for the string current and a fuse and overhead per group. The coarsest group of each device voltage class and the fuse limit should be evaluated first. The group size can then be selected from the near-optimal set or the Pareto set of benefit and energy after faults, together with the cell assignment [B]. For control and BMS developers, restricting the online search in software is an alternative to coarsening the hardware, provided that the reported certificate is understood to apply to the restricted set and that a

safe fallback is defined [C]. For techno-economic analysis, value claims should be stated for a specific partition, chemistry, string length, pack price and maintenance and resale assumptions, together with the maintenance saving needed to break even, and checked against an independent implementation.

8.4 Robustness of the Conclusions

The thesis-level conclusions do not all hold equally widely. Table 8.3 sorts them into three classes. Robust ones held in every sensitivity case tested, conditional ones hold within stated ranges, and open ones are settled by no study in the thesis.

8.5 Research Priorities

The open conclusions define the priorities, in order of how much they could change the thesis-level result.

1. **Controller-realised lifetime.** Couple the controller of Paper C, applied at Paper B's least costly candidates, to the ageing models of Papers A and B, and quantify how much of the ideal extension a realisable controller retains. Such coupling closes the link that both economic conclusions depend on.
2. **Maintenance and second-life value.** Measure the maintenance cost and second-life value of the RBP, the two quantities on which a net economic benefit now rests, for example from the service events in fleet warranty and service data that reconfiguration would avoid [B].
3. **One lifetime model across levels.** Simulate grouped packs at the use intensity of the economic scenarios, with bypass decisions fed back to the loading, temperature and ageing of the remaining units and with correlated and spatial heterogeneity, so that value and architecture are judged on one opportunity.
4. **Joint design and hardware validation.** Choose grouping, cell assignment and online restriction jointly, including switching penalties and estimation error. Verify embedded timing, commutation, degraded operation and safety in hardware-in-the-loop and prototype tests, starting

with the switch-path failure rate and loss of a coarse-group prototype with three to seven groups [B].

Beyond these priorities, the switching hardware can serve estimation as well as power routing. Initial simulation results show that switching a cell group by a pseudo-random binary sequence turns the load current into broadband excitation for on-board impedance identification, without a separate excitation source [F]. Because a switched unit's current jumps between zero and the pack current, the estimator must also capture nonlinear kinetics. Preliminary results on simulated switching data indicate that a convex grid estimator has a lower validation error than estimators linear in the current [G]. A next step is to weigh the information gained from such estimation against tracking and switching cost in the supervisory objective.

Reconfiguration may also add value in uses that this thesis does not assess. In AC-native battery systems, switching and coordination embedded in the pack let it directly synthesise AC waveforms instead of acting as a passive DC source requiring an external inverter [I]. Bidirectional charging adds battery use beyond driving. In a residential study, such use degraded the battery by 20 to 26% over ten years [L], and energy management for such operation has been formulated as ageing-aware predictive control [J]. Because use intensity is one of the conditions that set the value of reconfiguration, such duty is a candidate application. Electric aircraft are another application. Battery degradation there limits operational flexibility and drives replacement [K]. A reconfigurable pack with single-cell voltage resolution has been developed for a 400-V, 80-kW aircraft propulsion chain, in which lower-capacity or faulty cells can be bypassed without loss of function [109].

Table 8.3: Robustness of the thesis-level conclusions. All are simulation-based and comparative (Table 3.3).

Class	Conclusion and supporting or limiting evidence
Robust	The ideal opportunity grows with series count (Paper A; confirmed for the 800-V-class string in Paper B) and falls with group size, fastest at small group sizes (Paper B). Cell-level switching is never the least costly candidate, and apart from favourable bounds and diagnostic counterfactuals, only half-price switching hardware makes a granularity pay at equal maintenance rates, by 5 EUR for NMC, which is practically break-even (Paper B). The least costly group sizes are unchanged for RBP maintenance factors from 0 to 1.5 (Paper B). Ranking-based feasible-set restriction (RFSR) keeps certification and computational benefit across the tested conditions (Paper C).
Conditional	The sign and size of the net-present-cost benefit depend on pack energy, annual distance, hardware premium, electricity price, pack price, string length, the CBP's maintenance rate and the residual-value convention (Papers A and B). In Paper A, a net benefit requires the assumed maintenance and residual-value advantages of the RBP. In Paper B, it requires the maintenance saving, and removing the residual value roughly halves it. The least costly k is a device voltage-class top or the fuse limit in 72 of 81 sensitivity combinations, so it follows the device data, the voltage margin and the inverter voltage window. The availability advantage of finer partitions holds only if switch-path failures are rare or almost always bypassable (Paper B).
Open	Controller-realised lifetime: Papers A and B assume idealised reconfiguration control and Paper C holds SOH fixed. Paper B reuses the ageing trajectories of Paper A's strings for every partition, so the feedback of bypassing a group on the ageing of the remaining units is not modelled, and those simulations cycle the strings far more intensively than vehicle use does. The maintenance and second-life advantages of the RBP, embedded execution, commutation and functional safety are untested.

Chapter 9

Conclusions

Dynamic reconfiguration can extend the life of a battery pack, but in the cases studied the longer life pays for the switching hardware only if that hardware is cheap or the reconfigurable pack also lowers maintenance cost. The answers below give the conditions.

Answer to RQ1: System-Level Value

In simulation and under idealised reconfiguration control, dynamic reconfiguration extends pack lifetime because the first cell to reach a limit no longer constrains the whole string [A], [D]. The gain grows with the spread of cell ageing and with the number of series-connected cells. The median gain reaches about 10% for the LFP and 18% for the NMC cells investigated, and the fitted trend exceeds 20% for high-voltage NMC packs. The economic outcome improves mainly for packs above about 47 kWh, driven less than 12,150 km per year, with an upfront premium below 5.62% [A]. Lifetime extension alone repays the switching hardware only if it costs less than about 0.6 to 2.7% of the pack price, well below the 8.5 to 9.4% estimated bottom-up in Paper A. Larger savings rest on the assumed lower maintenance rate, lower end-of-life threshold and higher resale value of the RBP. The thesis therefore establishes the lifetime opportunity of reconfiguration and a cost target for its switching hardware.

Answer to RQ2: Physical Implementation

Switching granularity should be selected from candidate group sizes evaluated jointly, because the group size that maximises lifetime extension does not

minimise lifetime cost [B]. The screen assumes idealised reconfiguration control, a 100-unit string and a device survey that is sparse at 150 and 200 V. Under these conditions, cell-level switching keeps the largest lifetime extension, but its current-sized switches cost a median of 31 to 52% of the pack price. The least costly group sizes lie mostly at the top of a device voltage class or at the fuse limit, $k = 18$ (LFP) and $k = 15$ (NMC), so the device data, the voltage margin and the inverter voltage window should fix the candidates first. Loss, net present cost and the energy still available after faults favour different group sizes, so the choice should be made from the near-optimal set or from the Pareto set of benefit and energy after faults, together with the cell assignment. Even the least costly group sizes pay only if reconfiguration lowers the maintenance rate by at least 28% (LFP) or 9% (NMC), a saving that has not been measured.

Answer to RQ3: Computational Exploitation

In simulations of 16- to 24-cell packs on a general-purpose computer, mixed-integer predictive control can exploit the combinatorial flexibility of a reconfigurable pack within the online time budget [C]. Doing so requires restricting the online search while the switching hardware stays unchanged. RFSR admits only prefixes of a state-dependent cell ranking, so the number of patterns per prediction step grows linearly with the number of cells. For a 20-cell pack, optimality was certified at every step, against 77.61% without the restriction, and the 95th-percentile solver time fell 6.8-fold. The price of this reliability is the same-state restriction gap, which is below 0.11% on average where both problems were certified. The restricted controller accepts a slightly higher penalty for engaging low-SOH cells and in return balances SOC better. These results were obtained without a penalty on switching activity and without state-estimation error.

Overall Conclusion

Dynamic battery reconfiguration derives its value from the ability to respond selectively to cell-level heterogeneity, yet each additional controllable degree of freedom increases the hardware and computational resources required to exploit it. Taken together, the three answers show how this trade-off limits which

switch configurations are worth providing and using. Idealised reconfiguration control defines the potential value, physical grouping determines what the architecture makes available, and online computation determines what the controller can exploit. The three answers thereby support the thesis proposition that practical battery reconfiguration is a co-design problem in which physical flexibility is valuable only to the extent that it can justify its hardware and computational costs. Applying this co-design requires considering battery architecture, power electronics, degradation and control jointly. Optimising any one of them in isolation is not enough.

References

[1] J. Šimaitis, R. Lupton, C. Vagg, I. Butnar, R. Sacchi and S. Allen, "Battery electric vehicles show the lowest carbon footprints among passenger cars across 1.5–3.0°C energy decarbonisation pathways," *Commun. Earth Environ.*, vol. 6, no. 1, p. 476, 2025.

[2] International Energy Agency, *Global EV Outlook 2024*, 2024. Accessed: 2025-05-20. [Online]. Available: `https://www.iea.org/reports/global-ev-outlook-2024`

[3] M. Etxandi-Santolaya, L. C. Casals and C. Corchero, "Extending the electric vehicle battery first life: Performance beyond the current end of life threshold," *Heliyon*, vol. 10, no. 4, e26066, 2024.

[4] R. Ma et al., "Pathway decisions for reuse and recycling of retired lithium-ion batteries considering economic and environmental functions," *Nat. Commun.*, vol. 15, no. 1, p. 7641, 2024.

[5] B. Kenney, K. Darcovich, D. D. MacNeil and I. J. Davidson, "Modelling the impact of variations in electrode manufacturing on lithium-ion battery modules," *J. Power Sources*, vol. 213, pp. 391–401, 2012.

[6] K. Rumpf, M. Naumann and A. Jossen, "Experimental investigation of parametric cell-to-cell variation and correlation based on 1100 commercial lithium-ion cells," *J. Energy Storage*, vol. 14, pp. 224–243, 2017.

[7] S. Paul, C. Diegelmann, H. Kabza and W. Tillmetz, "Analysis of ageing inhomogeneities in lithium-ion battery systems," *J. Power Sources*, vol. 239, pp. 642–650, 2013.

[8] M. Schindler, J. Sturm, S. Ludwig, J. Schmitt and A. Jossen, "Evolution of initial cell-to-cell variations during a three-year production cycle," *eTransportation*, vol. 8, p. 100 102, 2021.

[9] L. Lu, X. Han, J. Li, J. Hua and M. Ouyang, "A review on the key issues for lithium-ion battery management in electric vehicles," *J. Power Sources*, vol. 226, pp. 272–288, 2013.

[10] H. Rahimi-Eichi, U. Ojha, F. Baronti and M.-Y. Chow, "Battery management system: An overview of its application in the smart grid and electric vehicles," *IEEE Ind. Electron. Mag.*, vol. 7, no. 2, pp. 4–16, 2013.

[11] W. Waag, C. Fleischer and D. U. Sauer, "Critical review of the methods for monitoring of lithium-ion batteries in electric and hybrid vehicles," *J. Power Sources*, vol. 258, pp. 321–339, 2014.

[12] T. Bruen and J. Marco, "Modelling and experimental evaluation of parallel connected lithium ion cells for an electric vehicle battery system," *J. Power Sources*, vol. 310, pp. 91–101, 2016.

[13] N. Bouchhima, M. Gossen, S. Schulte and K. P. Birke, "Lifetime of self-reconfigurable batteries compared with conventional batteries," *J. Energy Storage*, vol. 15, pp. 400–407, 2018.

[14] L. Zhou et al., "Quantifying the impact of cell-to-cell inconsistency on electric vehicle battery degradation and utilization," *Nat. Energy*, pp. 1–11, 2026.

[15] M. M. Hoque, M. A. Hannan, A. Mohamed and A. Ayob, "Battery charge equalization controller in electric vehicle applications: A review," *Renew. Sustain. Energy Rev.*, vol. 75, pp. 1363–1385, 2017.

[16] J. Gallardo-Lozano, E. Romero-Cadaval, M. I. Milanes-Montero and M. A. Guerrero-Martinez, "Battery equalization active methods," *J. Power Sources*, vol. 246, pp. 934–949, 2014.

[17] S. Ci, N. Lin and D. Wu, "Reconfigurable battery techniques and systems: A survey," *IEEE Access*, vol. 4, pp. 1175–1189, 2016.

[18] S. Muhammad, M. U. Rafique, S. Li, Z. Shao, Q. Wang and X. Liu, "Reconfigurable battery systems: A survey on hardware architecture and research challenges," *ACM Trans. Des. Autom. Electron. Syst.*, vol. 24, no. 2, pp. 1–27, 2019.

[19] W. Han, T. Wik, A. Kersten, G. Dong and C. Zou, "Next-generation battery management systems: Dynamic reconfiguration," *IEEE Ind. Electron. Mag.*, vol. 14, no. 4, pp. 20–31, 2020.

[20] J. Estaller et al., "Cost and efficiency optimization for a reconfigurable e-bike battery system," in *Proc. 26th European Conference on Power Electronics and Applications (EPE 2025)*, Paris, France, 2025, pp. 1–7.

[21] J. Engelhardt, J. M. Zepter, M. Marinelli and L. Piegari, "Efficiency characteristic and operating area of high-power reconfigurable batteries," *IEEE Trans. Ind. Appl.*, vol. 60, no. 2, pp. 3676–3684, 2024.

[22] A. Mondoha, J. Sabatier, P. Lanusse, S. Tippmann and C. Farges, "Nonlinear model predictive control for a simulated reconfigurable battery pack," *IFAC-PapersOnLine*, vol. 54, no. 6, pp. 353–358, 2021.

[23] Z. M. Pinter, G. Rohde and M. Marinelli, "Comparative analysis of rule-based and model-predictive control algorithms in reconfigurable battery systems for EV fast-charging stations," *J. Energy Storage*, vol. 116, p. 116 008, 2025.

[24] T. Marcucci and R. Tedrake, "Warm start of mixed-integer programs for model predictive control of hybrid systems," *IEEE Trans. Autom. Control*, vol. 66, no. 6, pp. 2433–2448, 2021.

[25] J.-M. Tarascon and M. Armand, "Issues and challenges facing rechargeable lithium batteries," *Nature*, vol. 414, no. 6861, pp. 359–367, 2001.

[26] J. B. Goodenough and K.-S. Park, "The Li-ion rechargeable battery: A perspective," *J. Am. Chem. Soc.*, vol. 135, no. 4, pp. 1167–1176, 2013.

[27] G. L. Plett, "Extended Kalman filtering for battery management systems of LiPB-based HEV battery packs. part 2. modeling and identification," *J. Power Sources*, vol. 134, no. 2, pp. 262–276, 2004.

[28] D. Stephens et al., "Lithium-ion battery safety issues for electric and plug-in hybrid vehicles," National Highway Traffic Safety Administration, Tech. Rep. DOT HS 812 418, Oct. 2017. Accessed: 2026-07-20. [Online]. Available: `https://www.nhtsa.gov/sites/nhtsa.gov/files/documents/12848-lithiumionsafetyhybrids_101217-v3-tag.pdf`

[29] G. L. Plett, "Extended Kalman filtering for battery management systems of LiPB-based HEV battery packs. part 3. state and parameter estimation," *J. Power Sources*, vol. 134, no. 2, pp. 277–292, 2004.

[30] M. Berecibar, I. Gandiaga, I. Villarreal, N. Omar, J. Van Mierlo and P. Van den Bossche, "Critical review of state of health estimation methods of Li-ion batteries for real applications," *Renew. Sustain. Energy Rev.*, vol. 56, pp. 572–587, 2016.

[31] Sony Murata, *Safety data sheet: US26650FTC1*, 2025. Accessed: 2025-07-13. [Online]. Available: `https://www.murata.com/-/media/webrenewal/products/batteries/cylindrical/pdf-sds/us26650ftc1-sds.ashx?la=en&cvid=20250131010000000000`

[32] Panasonic/Sanyo, *Datasheet Cell Type UR18650E*, 2025. Accessed: 2025-07-13. [Online]. Available: `https://www.master-instruments.com.au/file/62415/1/Sanyo-UR18650E.pdf`

[33] J. Schmalstieg, S. Käbitz, M. Ecker and D. U. Sauer, "A holistic aging model for Li(NiMnCo)O_2 based 18650 lithium-ion batteries," *J. Power Sources*, vol. 257, pp. 325–334, 2014.

[34] S. Käbitz, "Untersuchung der Alterung von Lithium-Ionen-Batterien mittels Elektroanalytik und elektrochemischer Impedanzspektroskopie," Ph.D. dissertation, RWTH Aachen University, Aachen, Germany, 2016.

[35] R. Schmuch, R. Wagner, G. Hörpel, T. Placke and M. Winter, "Performance and cost of materials for lithium-based rechargeable automotive batteries," *Nat. Energy*, vol. 3, no. 4, pp. 267–278, 2018.

[36] Y. Preger et al., "Degradation of commercial lithium-ion cells as a function of chemistry and cycling conditions," *J. Electrochem. Soc.*, vol. 167, no. 12, p. 120 532, 2020.

[37] C. Zhang, K. Li, L. Pei and C. Zhu, "An integrated approach for real-time model-based state-of-charge estimation of lithium-ion batteries," *J. Power Sources*, vol. 283, pp. 24–36, 2015.

[38] Y. Gao and S. Onori, "Advancing SOC estimation in $LiFePO_4$ batteries: Enhanced dQ/dV curve and short-pulse methods," *eTransportation*, vol. 26, p. 100 466, 2025.

[39] BloombergNEF, *Lithium-ion battery pack prices fall to $108 per kilowatt-hour, despite rising metal prices*, Press release, Dec. 2025. Accessed: 2026-07-20. [Online]. Available: `https://about.bnef.com/insights/clean-transport/lithium-ion-battery-pack-prices-fall-to-`

108-per-kilowatt-hour-despite-rising-metal-prices-bloombergnef/

[40] M. Naumann, M. Schimpe, P. Keil, H. C. Hesse and A. Jossen, "Analysis and modeling of calendar aging of a commercial $LiFePO_4$/graphite cell," *J. Energy Storage*, vol. 17, pp. 153–169, 2018.

[41] M. Naumann, F. B. Spingler and A. Jossen, "Analysis and modeling of cycle aging of a commercial $LiFePO_4$/graphite cell," *J. Power Sources*, vol. 451, p. 227 666, 2020.

[42] F. Schomburg et al., "Lithium-ion battery cell formation: Status and future directions towards a knowledge-based process design," *Energy Environ. Sci.*, vol. 17, no. 8, pp. 2686–2733, 2024.

[43] S. F. Schuster, M. J. Brand, P. Berg, M. Gleissenberger and A. Jossen, "Lithium-ion cell-to-cell variation during battery electric vehicle operation," *J. Power Sources*, vol. 297, pp. 242–251, 2015.

[44] D. Bernardi, E. Pawlikowski and J. Newman, "A general energy balance for battery systems," *J. Electrochem. Soc.*, vol. 132, no. 1, pp. 5–12, 1985.

[45] A. Geslin, L. Xu, D. Ganapathi, K. Moy, W. C. Chueh and S. Onori, "Dynamic cycling enhances battery lifetime," *Nat. Energy*, vol. 10, no. 2, pp. 172–180, 2025.

[46] Q. Ouyang, N. Ghaeminezhad, Y. Li, T. Wik and C. Zou, "A unified model for active battery equalization systems," *IEEE Trans. Control Syst. Technol.*, vol. 33, no. 2, pp. 685–699, 2025.

[47] Q. Ouyang, W. Han, C. Zou, G. Xu and Z. Wang, "Cell balancing control for lithium-ion battery packs: A hierarchical optimal approach," *IEEE Trans. Ind. Informat.*, vol. 16, no. 8, pp. 5065–5075, 2020.

[48] N. Bouchhima, M. Schnierle, S. Schulte and K. P. Birke, "Active model-based balancing strategy for self-reconfigurable batteries," *J. Power Sources*, vol. 322, pp. 129–137, 2016.

[49] M. Alahmad, H. Hess, M. Mojarradi, W. West and J. Whitacre, "Battery switch array system with application for JPL's rechargeable micro-scale batteries," *J. Power Sources*, vol. 177, no. 2, pp. 566–578, 2008.

[50] L. He, E. Kim and K. G. Shin, "Resting weak cells to improve battery pack's capacity delivery via reconfiguration," in *Proc. 7th International Conference on Future Energy Systems (e-Energy '16)*, 2016, pp. 1–11.

[51] M. Schmid, E. Gebauer and C. Endisch, "Structural analysis in reconfigurable battery systems for active fault diagnosis," *IEEE Trans. Power Electron.*, vol. 36, no. 8, pp. 8672–8684, 2021.

[52] S. Schwertner et al., "Design and implementation of an intelligent reconfigurable high-voltage battery system for next-generation electric vehicles," *Batteries*, vol. 11, no. 11, p. 424, 2025.

[53] J. Engelhardt, J. M. Zepter, T. Gabderakhmanova and M. Marinelli, "Efficiency characteristic of a high-power reconfigurable battery with series-connected topology," in *Proc. Int. Power Electron. Conf.*, 2022, pp. 2370–2376.

[54] B. J. Baliga, *Fundamentals of Power Semiconductor Devices*, 2nd ed. Cham: Springer, 2019.

[55] C. Geng et al., "Fundamental techniques for optimal control of reconfigurable battery systems: System modeling and feasible search space construction," *arXiv preprint arXiv:2501.03028*, 2025.

[56] International Organization for Standardization, *Electrically propelled road vehicles—safety specifications—part 1: Rechargeable energy storage system (RESS)*, International Organization for Standardization, 2019. Accessed: 2026-09-01. [Online]. Available: `https://www.iso.org/standard/68665.html`

[57] International Organization for Standardization, *Electrically propelled road vehicles—safety specifications—part 1: Rechargeable energy storage system (RESS)—amendment 1: Safety management of thermal propagation*, International Organization for Standardization, 2022. Accessed: 2026-09-01. [Online]. Available: `https://www.iso.org/standard/73574.html`

[58] International Organization for Standardization, *Road vehicles—functional safety*, International Organization for Standardization, 2018. Accessed: 2026-09-01.

[59] N. Tashakor, J. Dusengimana, M. Bayati, A. Kersten, H. Schotten and S. Götz, "General decoupling and sampling technique for reduced-sensor battery management systems in modular reconfigurable batteries," *Batteries*, vol. 9, no. 2, p. 99, 2023.

[60] BatteryDesign.net, *Battery pack database*, 2025. Accessed: 2025-08-31. [Online]. Available: `https://www.batterydesign.net/downloads/battery-pack-database/`

[61] I. Aghabali, J. Bauman, P. J. Kollmeyer, Y. Wang, B. Bilgin and A. Emadi, "800-V electric vehicle powertrains: Review and analysis of benefits, challenges, and future trends," *IEEE Trans. Transp. Electrif.*, vol. 7, no. 3, pp. 927–948, 2021.

[62] Trafikanalys, *Fordonsstatistik 2024: Körsträcka per fordon och år*, 2024. Accessed: 2025-05-20. [Online]. Available: `https://www.trafa.se`

[63] EV Database, *Energy consumption of full electric vehicles cheatsheet*, 2025. Accessed: 2025-07-01. [Online]. Available: `https://ev-database.org/cheatsheet/energy-consumption-electric-car`

[64] United Nations, *UN Global Technical Regulation No. 15: Worldwide Harmonized Light Vehicles Test Procedure (WLTP), Amendment 6*, 2021. [Online]. Available: `https://unece.org/sites/default/files/2021-01/ECE-TRANS-180a15am6e.pdf`

[65] L. Guzzella and A. Sciarretta, *Vehicle Propulsion Systems: Introduction to Modeling and Optimization*, 3rd ed. Springer, 2013.

[66] S. Wang et al., "Battery system active control strategies," in *Battery System Modeling*, Elsevier, 2021, pp. 313–340.

[67] V. Nguyen-Tien, C. Zhang, E. Strobl and R. J. R. Elliott, "The closing longevity gap between battery electric vehicles and internal combustion vehicles in Great Britain," *Nat. Energy*, vol. 10, no. 3, pp. 354–364, 2025.

[68] BloombergNEF, *Lithium-ion battery pack prices see largest drop since 2017, falling to $115 per kilowatt-hour*, Press release, Dec. 2024. Accessed: 2025-06-20. [Online]. Available: `https://about.bnef.com/insights/commodities/lithium-ion-battery-pack-prices-see-largest-drop-since-2017-falling-to-115-per-kilowatt-hour-bloombergnef/`

[69] Q. Dong, S. Liang, J. Li, H. C. Kim, W. Shen and T. J. Wallington, "Cost, energy, and carbon footprint benefits of second-life electric vehicle battery use," *iScience*, vol. 26, no. 7, p. 107 195, 2023.

[70] P. A. Christensen, W. Mrozik and M. S. Wise, "A study on the safety of second-life batteries in battery energy storage systems," Office for Product Safety and Standards, Commissioned Study, 2023. Accessed: 2025-08-26. [Online]. Available: `https://www.gov.uk/government/publications/safety-of-second-life-batteries-in-battery-energy-storage-systems`

[71] National Aeronautics and Space Administration, *Standard for models and simulations*, NASA-STD-7009B, National Aeronautics and Space Administration, 2024. Accessed: 2026-09-01. [Online]. Available: `https://standards.nasa.gov/standard/NASA/NASA-STD-7009`

[72] C. J. Roy and W. L. Oberkampf, "A comprehensive framework for verification, validation, and uncertainty quantification in scientific computing," *Comput. Methods Appl. Mech. Eng.*, vol. 200, no. 25–28, pp. 2131–2144, 2011.

[73] M. Schimpe et al., "Energy efficiency evaluation of a stationary lithium-ion battery container storage system via electro-thermal modeling and detailed component analysis," *Appl. Energy*, vol. 210, pp. 211–229, 2018.

[74] J. Engels, B. Claessens and G. Deconinck, "Techno-economic analysis and optimal control of battery storage for frequency control services, applied to the German market," *Appl. Energy*, vol. 242, pp. 1036–1049, 2019.

[75] P. M. Attia et al., "Review—"Knees" in lithium-ion battery aging trajectories," *J. Electrochem. Soc.*, vol. 169, no. 6, 2022, Art. no. 060517.

[76] H. A. David and H. N. Nagaraja, *Order Statistics*, 3rd ed. John Wiley & Sons, 2003.

[77] N. Metropolis and S. Ulam, "The Monte Carlo method," *J. Am. Stat. Assoc.*, vol. 44, no. 247, pp. 335–341, 1949.

[78] J. P. C. Kleijnen, *Design and Analysis of Simulation Experiments*. New York: Springer, 2008.

[79] M. D. McKay, R. J. Beckman and W. J. Conover, "A comparison of three methods for selecting values of input variables in the analysis of output from a computer code," *Technometrics*, vol. 21, no. 2, pp. 239–245, 1979.

[80] M. Stein, "Large sample properties of simulations using latin hypercube sampling," *Technometrics*, vol. 29, no. 2, pp. 143–151, 1987.

[81] A. Saltelli, P. Annoni, I. Azzini, F. Campolongo, M. Ratto and S. Tarantola, "Variance based sensitivity analysis of model output: Design and estimator for the total sensitivity index," *Comput. Phys. Commun.*, vol. 181, no. 2, pp. 259–270, 2010.

[82] F. Pianosi et al., "Sensitivity analysis of environmental models: A systematic review with practical workflow," *Environ. Model. Softw.*, vol. 79, pp. 214–232, 2016.

[83] K. Miettinen, *Nonlinear Multiobjective Optimization* (International Series in Operations Research & Management Science). New York: Springer, 1999, vol. 12.

[84] J. B. Rawlings, D. Q. Mayne and M. M. Diehl, *Model Predictive Control: Theory, Computation, and Design*, 2nd ed. Nob Hill Publishing, 2017. [Online]. Available: `https://sites.engineering.ucsb.edu/~jbraw/mpc/`

[85] A. Bemporad and M. Morari, "Control of systems integrating logic, dynamics, and constraints," *Automatica*, vol. 35, no. 3, pp. 407–427, 1999.

[86] A. Richards and J. P. How, "Mixed-integer programming for control," in *Proc. Amer. Control Conf. (ACC)*, 2005, pp. 2676–2683.

[87] L. A. Wolsey, *Integer Programming*. New York: Wiley, 1998.

[88] P. Hespanhol, R. Quirynen and S. Di Cairano, "A structure exploiting branch-and-bound algorithm for mixed-integer model predictive control," in *Proc. 18th Eur. Control Conf. (ECC)*, 2019, pp. 2763–2768.

[89] R. G. Sargent, "Verification and validation of simulation models," *J. Simul.*, vol. 7, no. 1, pp. 12–24, 2013.

[90] S. Bacquet, N. Léto, J. Lachaize, R. Thomas, Y. Lopez and L. Cassarino, "Simulation and testing of self reconfigurable battery advanced functions for automotive application," in *Proc. 36th International Electric Vehicle Symposium and Exhibition (EVS36)*, Sacramento, CA, USA, Jun. 2023.

[91] D. Karunathilake, M. Vilathgamuwa, Y. Mishra, P. Corry, T. Farrell and S. S. Choi, "Degradation-conscious multiobjective optimal control of reconfigurable Li-ion battery energy storage systems," *Batteries*, vol. 9, no. 4, p. 217, 2023.

[92] M. A. Rahman, K. De Craemer, J. Büscher, J. Driesen, P. Coenen and C. Mol, "Comparative analysis of reconfiguration assisted management of battery storage systems," in *Proc. IEEE Annu. Conf. Ind. Electron. Soc.*, 2019, pp. 5921–5926.

[93] Z. Li et al., *A smart adaptively reconfigurable DC battery for higher efficiency of electric vehicle drive trains*, arXiv preprint, 2023. [Online]. Available: `https://arxiv.org/abs/2301.07414`

[94] F. Roemer, M. Ahmad, F. Chang and M. Lienkamp, "Optimization of a cascaded H-bridge inverter for electric vehicle applications including cost consideration," *Energies*, vol. 12, no. 22, p. 4272, 2019.

[95] A. M. Fares, C. Klumpner and M. Sumner, "Optimising the structure of a cascaded modular battery system for enhancing the performance of battery packs," *The Journal of Engineering*, vol. 2019, no. 17, pp. 3862–3866, 2019.

[96] D. J. Rogers, L. J. M. Aslett and M. C. M. Troffaes, "Modelling of modular battery systems under cell capacity variation and degradation," *Applied Energy*, vol. 283, p. 116 360, 2021.

[97] A. Farakhor, D. Wu, Y. Wang and H. Fang, "A novel modular, reconfigurable battery energy storage system: Design, control, and experimentation," *IEEE Trans. Transp. Electrif.*, vol. 9, no. 2, pp. 2878–2890, 2023.

[98] A. Farakhor, D. Wu, Y. Wang and H. Fang, "Scalable optimal power management for large-scale battery energy storage systems," *IEEE Trans. Transp. Electrif.*, vol. 10, no. 3, pp. 5002–5016, 2024.

[99] G. K. Peprah, F. Liberati, F. Altaf, G. Osei-Dadzie, A. Di Giorgio and A. Pietrabissa, "Optimal load sharing in reconfigurable battery systems using an improved model predictive control method," in *Proc. 2021 29th Mediterranean Conference on Control and Automation (MED)*, 2021, pp. 979–984.

[100] I. Ebrahimi and R. de Castro, "Design and experimental validation of a safe control strategy for reconfigurable batteries," *IEEE Trans. Control Syst. Technol.*, vol. 34, no. 3, pp. 1404–1418, 2026.

[101] M. Wei et al., "A reliable dynamically reconfigurable battery topology family and hybrid control strategy suitable for multiple operating conditions," *IEEE Trans. Ind. Electron.*, vol. 73, no. 6, pp. 8555–8566, 2026.

[102] P. Liu et al., "A learning-based method for battery health balancing and capacity maximization in reconfigurable battery systems," *J. Energy Storage*, vol. 166, p. 122 406, 2026.

[103] A. Irshayyid, W. Yang and J. Chen, "Real-time balancing control of reconfigurable battery packs using reinforcement learning," *IEEE Trans. Transp. Electrif.*, vol. 12, no. 4, pp. 7013–7024, 2026.

[104] C. Geng et al., "A unified modeling framework of reconfigurable battery systems for optimal control," *IEEE Trans. Transp. Electrif.*, vol. 12, no. 3, pp. 5336–5347, 2026.

[105] F. Margot, "Symmetry in integer linear programming," in *50 Years of Integer Programming 1958–2008*, M. Jünger et al., Eds., Berlin, Heidelberg: Springer, 2010, pp. 647–686.

[106] V. Kaibel and M. E. Pfetsch, "Packing and partitioning orbitopes," *Math. Program.*, vol. 114, no. 1, pp. 1–36, 2008.

[107] J. Ostrowski, J. Linderoth, F. Rossi and S. Smriglio, "Orbital branching," *Math. Program.*, vol. 126, no. 1, pp. 147–178, 2011.

[108] A. Škegro, *Simulation and post-processing code for "system-level assessment of dynamic reconfiguration for lifetime and cost outcomes in electric vehicle battery packs"*, GitHub repository, version 1.1.0, 2026. Accessed: 2026-11-09. [Online]. Available: `https://github.com/askegro/NCOMMS-25-71405-T_Code-v1.1.0/tree/v1.1.0`

[109] S. Diecke, N. Sorokina, W. Bliemetsrieder and M. Kuder, "Reconfigurable battery architectures for electric aircraft," in *Proc. 2025 IEEE/AIAA Transportation Electrification Conference and Electric Aircraft Technologies Symposium (ITEC+EATS)*, Anaheim, CA, USA, 2025, pp. 1–6.